300x300MM PENETRATIONS ON 0.6MM & 0.6MM EQUIDECK ROOFS

Max. Inwards or Outwards 1.0kPa

Allowable Span (m)

Edge Distance (m)	T ≥ 50			T ≥ 75								T ≥ 100				T ≥ 125		≥ 150	T ≥ 200	≥ 250	
m	1.00	1.25	1.50	1.75	2.00	2.25	2.50	2.75	3.00	3.25	3.50	3.75	4.00	4.25	4.50	4.75	5.00	5.25	5.50	5.75	6.00	6.25
0.3	✓	✓	✓	✓	✓	✓	✓	✓	✓	✓	✓	✓	✓	✓	✓	✓	✓	✓	✓	✓	✓	×
0.4	×	✓	✓	✓	✓	✓	✓	✓	✓	✓	✓	✓	✓	✓	✓	✓	✓	✓	✓	✓	✓	×
0.5	×	×	✓	✓	✓	✓	✓	✓	✓	✓	✓	✓	✓	✓	✓	✓	✓	✓	✓	✓	✓	×
0.6	×	×	✓	✓	✓	✓	✓	✓	✓	✓	✓	✓	✓	✓	✓	✓	✓	✓	✓	✓	✓	×
0.7	×	×	×	✓	✓	✓	✓	✓	✓	✓	✓	✓	✓	✓	✓	✓	✓	✓	✓	✓	✓	×
0.8	×	×	×	×	✓	✓	✓	✓	✓	✓	✓	✓	✓	✓	✓	✓	✓	✓	✓	✓	✓	×
0.9	×	×	×	×	×	✓	✓	✓	✓	✓	✓	✓	✓	✓	✓	✓	✓	✓	✓	✓	✓	×
1.0	×	×	×	×	×	×	✓	✓	✓	✓	✓	✓	✓	✓	✓	✓	✓	✓	✓	✓	×	×
1.1	×	×	×	×	×	×	✓	✓	✓	✓	✓	✓	✓	✓	✓	✓	✓	✓	✓	×	×	×
1.2	×	×	×	×	×	×	×	✓	✓	✓	✓	✓	✓	✓	✓	✓	✓	✓	×	×	×	×
1.3	×	×	×	×	×	×	×	×	✓	✓	✓	✓	✓	✓	✓	✓	✓	✓	×	×	×	×
1.4	×	×	×	×	×	×	×	×	×	✓	✓	✓	✓	✓	✓	✓	✓	×	×	×	×	×
1.5	×	×	×	×	×	×	×	×	×	×	✓	✓	✓	✓	✓	✓	×	×	×	×	×	×
1.6	×	×	×	×	×	×	×	×	×	×	✓	✓	✓	✓	✓	×	×	×	×	×	×	×
1.7	×	×	×	×	×	×	×	×	×	×	×	✓	✓	✓	×	×	×	×	×	×	×	×
1.8	×	×	×	×	×	×	×	×	×	×	×	×	✓	✓	✓	×	×	×	×	×	×	×
1.9	×	×	×	×	×	×	×	×	×	×	×	×	×	✓	✓	×	×	×	×	×	×	×
2.0	×	×	×	×	×	×	×	×	×	×	×	×	×	×	✓	×	×	×	×	×	×	×
2.1	×	×	×	×	×	×	×	×	×	×	×	×	×	×	✓	×	×	×	×	×	×	×
2.2	×	×	×	×	×	×	×	×	×	×	×	×	×	×	×	✓	×	×	×	×	×	×
2.3	×	×	×	×	×	×	×	×	×	×	×	×	×	×	×	×	×	×	×	×	×	×

Max. Inwards or Outwards 1.5kPa

Allowable Span (m)

Edge Distance (m)	T ≥ 50			T ≥ 75									T ≥ 100				T ≥ 125		≥ 150	T ≥ 200	
m	1.00	1.25	1.50	1.75	2.00	2.25	2.50	2.75	3.00	3.25	3.50	3.75	4.00	4.25	4.50	4.75	5.00	5.25			
0.3	✓	✓	✓	✓	✓	✓	✓	✓	✓	✓	✓	✓	✓	✓	✓	✓	✓	×			
0.4	×	✓	✓	✓	✓	✓	✓	✓	✓	✓	✓	✓	✓	✓	✓	✓	✓	×			
0.5	×	×	✓	✓	✓	✓	✓	✓	✓	✓	✓	✓	✓	✓	✓	✓	✓	×			
0.6	×	×	✓	✓	✓	✓	✓	✓	✓	✓	✓	✓	✓	✓	✓	✓	✓	×			
0.7	×	×	×	✓	✓	✓	✓	✓	✓	✓	✓	✓	✓	✓	✓	✓	✓	×			
0.8	×	×	×	×	✓	✓	✓	✓	✓	✓	✓	✓	✓	✓	✓	✓	×	×			
0.9	×	×	×	×	×	✓	✓	✓	✓	✓	✓	✓	✓	✓	✓	×	×	×			
1.0	×	×	×	×	×	×	✓	✓	✓	✓	✓	✓	✓	✓	×	×	×	×			
1.1	×	×	×	×	×	×	×	✓	✓	✓	✓	✓	✓	✓	×	×	×	×			
1.2	×	×	×	×	×	×	×	×	✓	✓	✓	✓	✓	×	×	×	×	×			
1.3	×	×	×	×	×	×	×	×	×	✓	✓	✓	✓	×	×	×	×	×			
1.4	×	×	×	×	×	×	×	×	×	×	✓	✓	✓	×	×	×	×	×			
1.5	×	×	×	×	×	×	×	×	×	×	×	✓	✓	×	×	×	×	×			
1.6	×	×	×	×	×	×	×	×	×	×	×	×	✓	×	×	×	×	×			
1.7	×	×	×	×	×	×	×	×	×	×	×	×	×	×	×	×	×	×			
1.8	×	×	×	×	×	×	×	×	×	×	×	×	×	×	×	×	×	×			
1.9	×	×	×	×	×	×	×	×	×	×	×	×	×	×	×	×	×	×			
2.0	×	×	×	×	×	×	×	×	×	×	×	×	×	×	×	×	×	×			

Max. Inwards or Outwards 2kPa

Allowable Span (m)

Edge Distance (m)	T ≥ 50			T ≥ 75				T ≥ 100				T ≥ 125		
m	1.00	1.25	1.50	1.75	2.00	2.25	2.50	2.75	3.00	3.25	3.50	3.75	4.00	
0.3	✓	✓	✓	✓	✓	✓	✓	✓	✓	✓	✓	✓	×	
0.4	×	✓	✓	✓	✓	✓	✓	✓	✓	✓	✓	✓	×	
0.5	×	×	✓	✓	✓	✓	✓	✓	✓	✓	✓	✓	×	
0.6	×	×	✓	✓	✓	✓	✓	✓	✓	✓	✓	✓	×	
0.7	×	×	×	✓	✓	✓	✓	✓	✓	✓	✓	✓	×	
0.8	×	×	×	×	✓	✓	✓	✓	✓	✓	✓	✓	×	
0.9	×	×	×	×	×	✓	✓	✓	✓	✓	✓	✓	×	
1.0	×	×	×	×	×	×	✓	✓	✓	✓	✓	✓	×	
1.1	×	×	×	×	×	×	✓	✓	✓	✓	✓	✓	×	
1.2	×	×	×	×	×	×	×	✓	✓	✓	✓	×	×	
1.3	×	×	×	×	×	×	×	×	✓	✓	✓	×	×	
1.4	×	×	×	×	×	×	×	×	×	✓	✓	×	×	
1.5	×	×	×	×	×	×	×	×	×	×	✓	×	×	
1.6	×	×	×	×	×	×	×	×	×	×	×	×	×	
1.7	×	×	×	×	×	×	×	×	×	×	×	×	×	
1.8	×	×	×	×	×	×	×	×	×	×	×	×	×	

Max. Inwards or Outwards 3kPa

Allowable Span (m)

Edge Distance (m)	≥ 50	T ≥ 75			T ≥ 100		
m	1.00	1.25	1.50	1.75	2.00	2.25	2.50
0.3	✓	✓	✓	✓	✓	✓	×
0.4	×	✓	✓	✓	✓	✓	×
0.5	×	×	✓	✓	✓	✓	×
0.6	×	×	✓	✓	✓	✓	×
0.7	×	×	×	✓	✓	✓	×
0.8	×	×	×	×	✓	✓	×
0.9	×	×	×	×	×	✓	×
1.0	×	×	×	×	×	×	×
1.1	×	×	×	×	×	×	×

450x450MM PENETRATIONS ON 0.6MM & 0.6MM EQUIDECK ROOFS

Max. Inwards or Outwards 1.0kPa

Allowable Span (m)

Edge Distance (m)	T ≥ 75									T ≥ 100			T ≥ 125		≥ 150	T ≥ 200		≥ 250	
m	1.25	1.50	1.75	2.00	2.25	2.50	2.75	3.00	3.25	3.50	3.75	4.00	4.25	4.50	4.75	5.00	5.25	5.50	5.75
0.3	✓	✓	✓	✓	✓	✓	✓	✓	✓	✓	✓	✓	✓	✓	✓	✓	✓	✓	×
0.4	✓	✓	✓	✓	✓	✓	✓	✓	✓	✓	✓	✓	✓	✓	✓	✓	✓	✓	×
0.5	×	✓	✓	✓	✓	✓	✓	✓	✓	✓	✓	✓	✓	✓	✓	✓	✓	✓	×
0.6	×	×	✓	✓	✓	✓	✓	✓	✓	✓	✓	✓	✓	✓	✓	✓	✓	✓	×
0.7	×	×	×	✓	✓	✓	✓	✓	✓	✓	✓	✓	✓	✓	✓	×	×	×	×
0.8	×	×	×	×	✓	✓	✓	✓	✓	✓	✓	✓	✓	✓	×	×	×	×	×
0.9	×	×	×	×	×	✓	✓	✓	✓	✓	✓	✓	✓	×	×	×	×	×	×
1.0	×	×	×	×	×	×	✓	✓	✓	✓	✓	✓	×	×	×	×	×	×	×
1.1	×	×	×	×	×	×	×	✓	✓	✓	✓	✓	✓	×	×	×	×	×	×
1.2	×	×	×	×	×	×	×	×	✓	✓	✓	✓	✓	×	×	×	×	×	×
1.3	×	×	×	×	×	×	×	×	×	✓	✓	✓	✓	×	×	×	×	×	×
1.4	×	×	×	×	×	×	×	×	×	×	✓	✓	✓	×	×	×	×	×	×
1.5	×	×	×	×	×	×	×	×	×	×	×	✓	✓	×	×	×	×	×	×
1.6	×	×	×	×	×	×	×	×	×	×	×	×	✓	×	×	×	×	×	×
1.7	×	×	×	×	×	×	×	×	×	×	×	×	×	×	×	×	×	×	×
1.8	×	×	×	×	×	×	×	×	×	×	×	×	×	×	×	×	×	×	×
1.9	×	×	×	×	×	×	×	×	×	×	×	×	×	×	×	×	×	×	×
2.0	×	×	×	×	×	×	×	×	×	×	×	×	×	×	×	×	×	×	×

Max. Inwards or Outwards 1.5kPa

Allowable Span (m)

Edge Distance (m)	T ≥ 75						T ≥ 100			T ≥ 125		≥ 150	T ≥ 200		
m	1.25	1.50	1.75	2.00	2.25	2.50	2.75	3.00	3.25	3.50	3.75	4.00	4.25	4.50	4.75
0.3	✓	✓	✓	✓	✓	✓	✓	✓	✓	✓	✓	✓	✓	✓	×
0.4	✓	✓	✓	✓	✓	✓	✓	✓	✓	✓	✓	✓	✓	✓	×
0.5	×	✓	✓	✓	✓	✓	✓	✓	✓	✓	✓	✓	✓	×	×
0.6	×	×	✓	✓	✓	✓	✓	✓	✓	✓	✓	✓	×	×	×
0.7	×	×	×	✓	✓	✓	✓	✓	✓	✓	✓	×	×	×	×
0.8	×	×	×	×	✓	✓	✓	✓	✓	✓	✓	×	×	×	×
0.9	×	×	×	×	×	✓	✓	✓	✓	✓	✓	×	×	×	×
1.0	×	×	×	×	×	×	✓	✓	✓	✓	×	×	×	×	×
1.1	×	×	×	×	×	×	×	✓	✓	✓	×	×	×	×	×
1.2	×	×	×	×	×	×	×	×	✓	✓	×	×	×	×	×
1.3	×	×	×	×	×	×	×	×	×	✓	×	×	×	×	×
1.4	×	×	×	×	×	×	×	×	×	✓	×	×	×	×	×
1.5	×	×	×	×	×	×	×	×	×	×	×	×	×	×	×
1.6	×	×	×	×	×	×	×	×	×	×	×	×	×	×	×
1.7	×	×	×	×	×	×	×	×	×	×	×	×	×	×	×

Max. Inwards or Outwards 2.0kPa

Allowable Span (m)

Edge Distance (m)	T ≥ 75				T ≥ 100			≥ 125	T ≥ 150		≥ 200	
m	1.25	1.50	1.75	2.00	2.25	2.50	2.75	3.00	3.25	3.50	3.75	4.00
0.3	✓	✓	✓	✓	✓	✓	✓	✓	✓	✓	✓	×
0.4	✓	✓	✓	✓	✓	✓	✓	✓	✓	✓	✓	×
0.5	×	✓	✓	✓	✓	✓	✓	✓	✓	✓	×	×
0.6	×	×	✓	✓	✓	✓	✓	✓	✓	×	×	×
0.7	×	×	×	✓	✓	✓	✓	✓	×	×	×	×
0.8	×	×	×	×	✓	✓	✓	✓	×	×	×	×
0.9	×	×	×	×	✓	✓	✓	×	×	×	×	×
1.0	×	×	×	×	×	✓	✓	×	×	×	×	×
1.1	×	×	×	×	×	✓	✓	×	×	×	×	×
1.2	×	×	×	×	×	×	✓	×	×	×	×	×
1.3	×	×	×	×	×	×	×	×	×	×	×	×
1.4	×	×	×	×	×	×	×	×	×	×	×	×

Max. Inwards or Outwards 3kPa

Allowable Span (m)

Edge Distance (m)	T ≥ 75				T ≥ 100		≥ 125
m	1.25	1.50	1.75	2.00	2.25	2.50	
0.3	✓	✓	✓	✓	✓	×	
0.4	✓	✓	✓	✓	✓	×	
0.5	×	✓	✓	✓	✓	×	
0.6	×	×	✓	✓	✓	×	
0.7	×	×	×	✓	✓	×	
0.8	×	×	×	×	✓	×	
0.9	×	×	×	×	✓	×	
1.0	×	×	×	×	×	×	
1.1	×	×	×	×	×	×	

DESIGN GUIDELINES (SINGLE OR MULTI SPAN ROOFS)

1. DETERMINE THE DESIRED LOCATION OF SUPPORT,
2. MARK THE LOCATION OF EACH PENETRATION,
3. PROVIDE ONLY ONE PENETRATION PER PANEL AND EXCLUDE TWO ADJOINING PANELS,
4. MEASURE THE DISTANCE BETWEEN THE EDGE OF PENETRATION TO THE NEAREST SUPPORT (EDGE DISTANCE),
5. CHECK THAT THE COMBINATION OF SPAN & EDGE DISTANCE FROM ABOVE TABLES IS OK,
6. IF NOT OK, PROVIDE EXTRA SUPPORT WHERE REQUIRED AND DOUBLE CHECK TO ENSURE THE NEW EDGE DISTANCE & SPAN CONFIGURATIONS ARE OK.

CONSTRUCTION GUIDELINES

7. ONLY ONE PERSON ALLOWED ON ANY ONE PANEL. MAX CONCENTRATED LOAD IS 1.4kN,
8. STAY AS CLOSE TO THE NEAREST SUPPORT AS POSSIBLE,
9. DO NOT STEP ON THE REMAINING SIDE STRIPS DURING OR AFTER CUT-OUT,
10. PENETRATIONS SHALL BE SYMMETRICALLY PLACED ACROSS THE WIDTH OF THE PANEL,
11. MAX POINT LOAD ON THE OPENING IS 0.25KN. THE LOAD SHALL BE EQUALLY DISTRIBUTED ALONG THE EDGES. IF THE LOAD IS ECCENTRIC THE ALLOWABLE EDGE DISTANCE SHALL BE REDUCED BY 0.2m,
12. FLASHING SHALL BE PROVIDED AROUND THE PENETRATION TO PREVENT MOISTURE INGRESSION,
13. CIRCULAR OPENING CAN BE PROVIDED IF ITS DIAMETER AND SIDES OF THE SQUARE OPENING ARE EQUIVALENT,
14. 300MM AND 450MM PENETRATIONS ARE ASSUMED TO BE CUT THROUGH ONLY ONE AND TWO RIBS RESPECTIVELY,
15. THIS DRAWING MUST BE READ IN CONJUNCTION WITH CORRESPONDING METECNO'S ROOF SPAN TABLES.

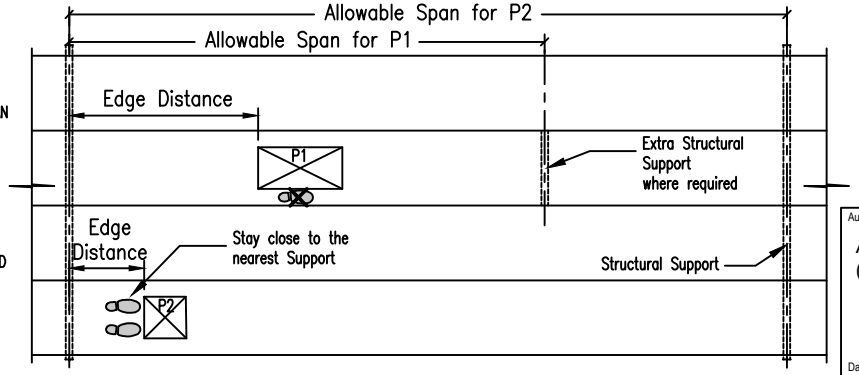

Panel Thickness, T (mm)

✓	T ≥ 50
✓	T ≥ 75
✓	T ≥ 100
✓	T ≥ 125
✓	T ≥ 150
✓	T ≥ 200
✓	T ≥ 250

Authorised For Issue :

Andrew Morrison
(RPEQ 12942)

Date : 23 October 2019

MILANOVIC NEALE
CONSULTING ENGINEERS
BRISBANE OFFICE
5/63 Annerley Road, Woolloongabba QLD 4102
PO Box 8380, Woolloongabba QLD 4102
T 07 3255 1877 F 07 3255 1878
IPSWICH OFFICE
18 Canning Street, North Ipswich QLD 4305
PO Box 2118, North Ipswich QLD 4305
T 07 3281 6603 F 07 3281 6602

BONDOR®
Metecno Pty Limited trading as Bondor
www.bondor.com.au 1300 300 099
ABN 44 096 402 934

Rev.	Date	Description	By	Check
0	24.10.19	Initial Issue	IT	HA

Drawn by: IT
Checked by: HA
Date: 24.10.2019

This drawing is copyright and the property of Metecno Pty Limited. It is subject to their recall and may not be reproduced or its contents divulged without written authority.

Dimensions are in mm - do not scale

Title: 0.6MM & 0.6MM EQUIDECK ROOF PENETRATIONS

Description: ALLOWABLE SPANS

Application: EXTERNAL ROOF - REGIONS A & B

Drawing Number: EDE03-RP01

A3

Revision: 0