ASKIN®
Performance Panels

ASKIN Exteriors

ViviD

Standard Details

Date: 09-2022

T. 13 000 ASKIN

© ASKIN Performance Panels

GENERAL NOTES

1. ASKIN PERFORMANCE PANELS DRAWINGS SHALL BE USED IN CONJUNCTION WITH PROJECT SPECIFICATIONS AND ALL OTHER RELEVANT TRADE DRAWINGS.

2. FIXING TYPES & CENTRES ARE NOMINATED AS A GENERAL APPLICATION AND MUST BE INCLUDED IN THE ENGINEERED DESIGN.

3. BY APPROVING THE ASKIN SHOP DRAWINGS, THE CLIENT / CONTRACTOR / ARCHITECT / DESIGNER WARRANTS THAT THEY HAVE REVIEWED THE SHOP DRAWINGS, COORDINATED THE SHOP DRAWINGS WITH ALL RELATED TRADES, VERIFIED ALL DIMENSIONS WITH ACTUAL FIELD CONDITIONS, RESOLVED ANY CLASHES AND REPORT ANY DISCREPANCIES BETWEEN EACH SET OF DRAWINGS AND WITHIN EACH SET OF DRAWINGS, CONFIRMED QUANTITIES AND PERFORMANCE REQUIREMENTS AND FOR FABRICATION PROCESSES, PRIOR TO THE MANUFACTURE AND INSTALLATION OF WORKS.

4. WHEN SHOP DRAWINGS ARE REQUIRED, NO PART OF THE STRUCTURE OR COMPONENT SHALL BE CONSTRUCTED WHERE RELATED TO THE SHOP DRAWINGS UNTIL AFTER THE SHOP DRAWINGS HAVE BEEN REVIEWED AND APPROVED. IT IS THE BUILDERS RESPONSIBILITY TO PLAN AHEAD AND ALLOW TIME FOR SHOP DRAWING CREATION, REVIEW, REVISE AND APPROVAL. THE GENERAL CONTRACTOR AND ALL SUBCONTRACTORS SHALL BE RESPONSIBLE FOR ANY WORK NOT IN CONFORMANCE WITH THE PLANS OR IN CONFLICT WITH ANY CODE.

5. ALL CONSTRUCTION SHALL COMPLY WITH THE MOST STRINGENT REQUIREMENTS OF ALL CURRENT APPLICABLE CITY, COUNTRY, STATE AND FEDERAL LAWS, RULES, CODES, ORDINANCES AND REGULATIONS. IF THE GENERAL CONTRACTOR OR ANY SUBCONTRACTOR PERFORMS ANY WORK IN CONFLICT WITH THE ABOVE MENTIONED LAWS, RULES, CODES, ORDINANCES AND REGULATIONS, THEN THE CONTRACTOR IN VIOLATION SHALL BEAR ALL COSTS OF REPAIR ARISING OUT OF THE NON-CONFORMING WORK.

6. SUBSTITUTION OF SPECIFIC MATERIALS OR PRODUCTS LISTED ON THE DRAWINGS SHALL NOT BE MADE WITHOUT THE WRITTEN AUTHORISATION BY ASKIN PERFORMANCE PANELS ENGINEER.

7. BEFORE COMMENCING ANY WORK CONSIDERED A VARIATION, ASKIN AND OR ITS SITE AGENT REQUIRES THE VARIATION TO BE APPROVED IN WRITING PRIOR TO COMMENCEMENT OF SUCH WORK. VARIATIONS INCLUDE BUT ARE NOT LIMITED TO ADDITION, DELETION OR CHANGES IN THE SCOPE OF WORKS DESCRIBED BY THE QUOTATION / DRAWINGS.

8. DIMENSIONS TAKE PRECEDENCE OVER SCALED MEASUREMENTS. UNIT OF MEASUREMENT ARE IN MILLIMETERS. DO NOT SCALE OFF DRAWINGS. DETAILS AND SECTIONS ON THE DRAWINGS ARE SHOWN AT SPECIFIC LOCATIONS AND ARE INTENDED TO SHOW GENERAL REQUIREMENTS THROUGHOUT.

9. DETAILS LABELED 'TYPICAL' OR 'STANDARD' ON THE DRAWINGS SHALL APPLY TO ALL SITUATIONS OCCURRING ON THE PROJECT THAT ARE THE SAME OR SIMILAR TO THOSE SPECIFICALLY DETAILED. THE APPLICABILITY OF THE DETAIL TO ITS LOCATION ON THE DRAWINGS CAN BE DETERMINED BY THE TITLE OF THE DETAIL. SUCH DETAILS SHALL APPLY WHETHER OR NOT THEY ARE REFERENCED AT EACH LOCATION.

10. ALL ASKIN PANEL DIMENSIONS, LOCATIONS, HEIGHTS & SET DOWNS TO BE MEASURED AND CONFIRMED ON SITE PRIOR TO PANEL ORDER. 20mm MIN. CAVITY REQUIRED BETWEEN PANEL WALLS AND ALL OTHER WALLS. VERMIN PROOFING MAY BE REQUIRED.

11. DOORS, WINDOWS & CUT OPENINGS SIZES TO BE CONFIRMED WITH APPROVED SCHEDULES. SIZES TO BE CONFIRMED & ORDERED OFF SCHEDULE, NOT PLAN DRAWINGS.

PLEASE NOTE THAT THESE DETAILS ARE RELEVANT FOR ALL CORE MATERIAL TYPES

XFLAM Volcore

ASKIN Performance Panels
www.askin.net.au
VIC P : 03 8769 4816 WA P : 08 9249 4022
SA P : 08 8252 7188 QLD P : 07 3718 9500
NSW P : 02 8825 2598 NT P : 08 8252 7188

PROJECT:
EXTERIORS - VIVID
GENERAL NOTES

©ASKIN 2022

Revision		
-	-	-
-	-	-
-	-	-
-	-	-
-	-	-
-	-	-
-	-	-

Checked By: A SHANNON	Scale: NTS
Drawn By: R VORWERK	Sheet size: A4
Issue date: 09.09.2022	Revision: -
Drawing No.	EXTVIVID - NOTES

ASKIN Performance Panels

EXTERIORS - VIVID

PANEL JOINT AND PROFILES

001 TYPICAL PANEL TO PANEL CONNECTION DETAIL REV: -
002 TYPICAL PANEL TO PANEL CONNECTION DETAIL REV: -
003 TYPICAL PANEL TO PANEL CONNECTION DETAIL REV: -

005 VIVID PANEL PROFILES REV: -
006 VIVID PANEL PROFILES REV: -

010 SEAMLESS PROFILE 3D RENDER REV: -
011 SILKLINE PROFILE 3D RENDER REV: -
012 AMBIENCE PROFILE 3D RENDER REV: -
013 INFINITE PROFILE 3D RENDER REV: -
014 TRANSFORM PROFILE 3D RENDER REV: -

VERTICAL PANEL DETAILS

100 TYPICAL WALL TO FLOOR CONNECTION DETAIL REV: -
101 TYPICAL WALL TO FLOOR CONNECTION DETAIL REV: -
102 TYPICAL WALL TO FLOOR CONNECTION DETAIL REV: -
103 TYPICAL WALL TO FLOOR CONNECTION DETAIL REV: -
104 TYPICAL WALL STACK JOINT CONNECTION DETAIL REV: -
105 TYPICAL WALL STACK JOINT CONNECTION DETAIL REV: -
106 TYPICAL WALL STACK JOINT CONNECTION DETAIL REV: -

110 TYPICAL WALL TO WALL CONNECTION DETAIL REV: -
111 TYPICAL WALL TO WALL CONNECTION DETAIL REV: -
112 TYPICAL WALL TO WALL CONNECTION DETAIL REV: -
113 TYPICAL WALL TO WALL CONNECTION DETAIL REV: -
114 TYPICAL WALL TO WALL CONNECTION DETAIL REV: -
115 TYPICAL WALL TO WALL CONNECTION DETAIL REV: -
116 TYPICAL WALL TO WALL CONNECTION DETAIL REV: -

120 TYPICAL WALL TO ROOF CONNECTION DETAIL REV: -
121 TYPICAL WALL TO ROOF CONNECTION DETAIL REV: -
122 TYPICAL WALL TO ROOF CONNECTION DETAIL REV: -
123 TYPICAL WALL TO ROOF CONNECTION DETAIL REV: -
124 TYPICAL WALL TO ROOF CONNECTION DETAIL REV: -

130 TYPICAL WINDOW CONNECTION DETAIL REV: -
131 TYPICAL WINDOW CONNECTION DETAIL REV: -
132 TYPICAL WINDOW CONNECTION DETAIL REV: -
133 TYPICAL WINDOW CONNECTION DETAIL REV: -

HORIZONTAL PANEL DETAILS

200 TYPICAL WALL TO FLOOR CONNECTION DETAIL REV: -
201 TYPICAL WALL TO FLOOR CONNECTION DETAIL REV: -
202 TYPICAL WALL TO FLOOR CONNECTION DETAIL REV: -
203 TYPICAL WALL TO FLOOR CONNECTION DETAIL REV: -

210 TYPICAL WALL TO WALL CONNECTION DETAIL REV: -
211 TYPICAL WALL TO WALL CONNECTION DETAIL REV: -
212 TYPICAL WALL TO WALL CONNECTION DETAIL REV: -
213 TYPICAL WALL TO WALL CONNECTION DETAIL REV: -
214 TYPICAL WALL TO WALL CONNECTION DETAIL REV: -
215 TYPICAL WALL TO WALL CONNECTION DETAIL REV: -
216 TYPICAL WALL TO WALL CONNECTION DETAIL REV: -
217 TYPICAL WALL TO WALL CONNECTION DETAIL REV: -

220 TYPICAL WALL TO ROOF CONNECTION DETAIL REV: -
221 TYPICAL WALL TO ROOF CONNECTION DETAIL REV: -
222 TYPICAL WALL TO ROOF CONNECTION DETAIL REV: -
223 TYPICAL WALL TO ROOF CONNECTION DETAIL REV: -
224 TYPICAL WALL TO ROOF CONNECTION DETAIL REV: -
225 TYPICAL WALL TO ROOF CONNECTION DETAIL REV: -
226 TYPICAL WALL TO ROOF CONNECTION DETAIL REV: -
227 TYPICAL WALL TO ROOF CONNECTION DETAIL REV: -

230 TYPICAL WINDOW CONNECTION DETAIL REV: -
231 TYPICAL WINDOW CONNECTION DETAIL REV: -
232 TYPICAL WINDOW CONNECTION DETAIL REV: -
233 TYPICAL WINDOW CONNECTION DETAIL REV: -

ASKIN Performance Panels
www.askin.net.au
VIC P : 03 8769 4816 WA P : 08 9249 4022
SA P : 08 8252 7188 QLD P : 07 3718 9500
NSW P : 02 8825 2598 NT P : 08 8252 7188

PROJECT:
EXTERIORS - VIVID
INDEX

©ASKIN 2022

Revision

-	-	-
-	-	-
-	-	-
-	-	-
-	-	-
-	-	-
-	-	-

Checked By: A SHANNON	Scale: NTS
Drawn By: R VORWERK	Sheet size: A4
Issue date: 09.09.2022	Revision: -
Drawing No.	EXTVIVID - INDEX 01

ASKIN Performance Panels

EXTERIORS - VIVID

TRANSFORM PROFILE VERTICAL DETAILS

300 TYPICAL WALL TO FLOOR CONNECTION DETAIL REV: -
301 TYPICAL WALL TO FLOOR CONNECTION DETAIL REV: -
302 TYPICAL WALL TO FLOOR CONNECTION DETAIL REV: -
303 TYPICAL WALL STACK JOINT CONNECTION DETAIL REV: -

310 TYPICAL WALL TO WALL CONNECTION DETAIL REV: -
311 TYPICAL WALL TO WALL CONNECTION DETAIL REV: -
312 TYPICAL WALL TO WALL CONNECTION DETAIL REV: -
313 TYPICAL WALL TO WALL CONNECTION DETAIL REV: -
314 TYPICAL WALL TO WALL CONNECTION DETAIL REV: -
315 TYPICAL WALL TO WALL CONNECTION DETAIL REV: -

320 TYPICAL WALL TO ROOF CONNECTION DETAIL REV: -
321 TYPICAL WALL TO ROOF CONNECTION DETAIL REV: -
322 TYPICAL WALL TO ROOF CONNECTION DETAIL REV: -
323 TYPICAL WALL TO ROOF CONNECTION DETAIL REV: -
324 TYPICAL WALL TO ROOF CONNECTION DETAIL REV: -

330 TYPICAL WINDOW CONNECTION DETAIL REV: -
331 TYPICAL WINDOW CONNECTION DETAIL REV: -

TRANSFORM PROFILE HORIZONTAL DETAILS

400 TYPICAL WALL TO FLOOR CONNECTION DETAIL REV: -
401 TYPICAL WALL TO FLOOR CONNECTION DETAIL REV: -
402 TYPICAL WALL TO FLOOR CONNECTION DETAIL REV: -
403 TYPICAL WALL TO FLOOR CONNECTION DETAIL REV: -

410 TYPICAL WALL TO WALL CONNECTION DETAIL REV: -
411 TYPICAL WALL TO WALL CONNECTION DETAIL REV: -
412 TYPICAL WALL TO WALL CONNECTION DETAIL REV: -
413 TYPICAL WALL TO WALL CONNECTION DETAIL REV: -
414 TYPICAL WALL TO WALL CONNECTION DETAIL REV: -
415 TYPICAL WALL TO WALL CONNECTION DETAIL REV: -
416 TYPICAL WALL TO WALL CONNECTION DETAIL REV: -

420 TYPICAL WALL TO ROOF CONNECTION DETAIL REV: -
421 TYPICAL WALL TO ROOF CONNECTION DETAIL REV: -
422 TYPICAL WALL TO ROOF CONNECTION DETAIL REV: -
423 TYPICAL WALL TO ROOF CONNECTION DETAIL REV: -
424 TYPICAL WALL TO ROOF CONNECTION DETAIL REV: -
425 TYPICAL WALL TO ROOF CONNECTION DETAIL REV: -
426 TYPICAL WALL TO ROOF CONNECTION DETAIL REV: -
427 TYPICAL WALL TO ROOF CONNECTION DETAIL REV: -

430 TYPICAL WINDOW CONNECTION DETAIL REV: -
431 TYPICAL WINDOW CONNECTION DETAIL REV: -

ASKIN Performance Panels
www.askin.net.au
VIC P : 03 8769 4816 WA P : 08 9249 4022
SA P : 08 8252 7188 QLD P : 07 3718 9500
NSW P : 02 8825 2598 NT P : 08 8252 7188

PROJECT:
EXTERIORS - VIVID
INDEX

©ASKIN 2022

Revision		
-	-	-
-	-	-
-	-	-
-	-	-
-	-	-
-	-	-
-	-	-

Checked By: A SHANNON	Scale: NTS
Drawn By: R VORWERK	Sheet size: A4
Issue date: 09.09.2022	Revision: -
Drawing No.: EXTVIVID - INDEX 02	

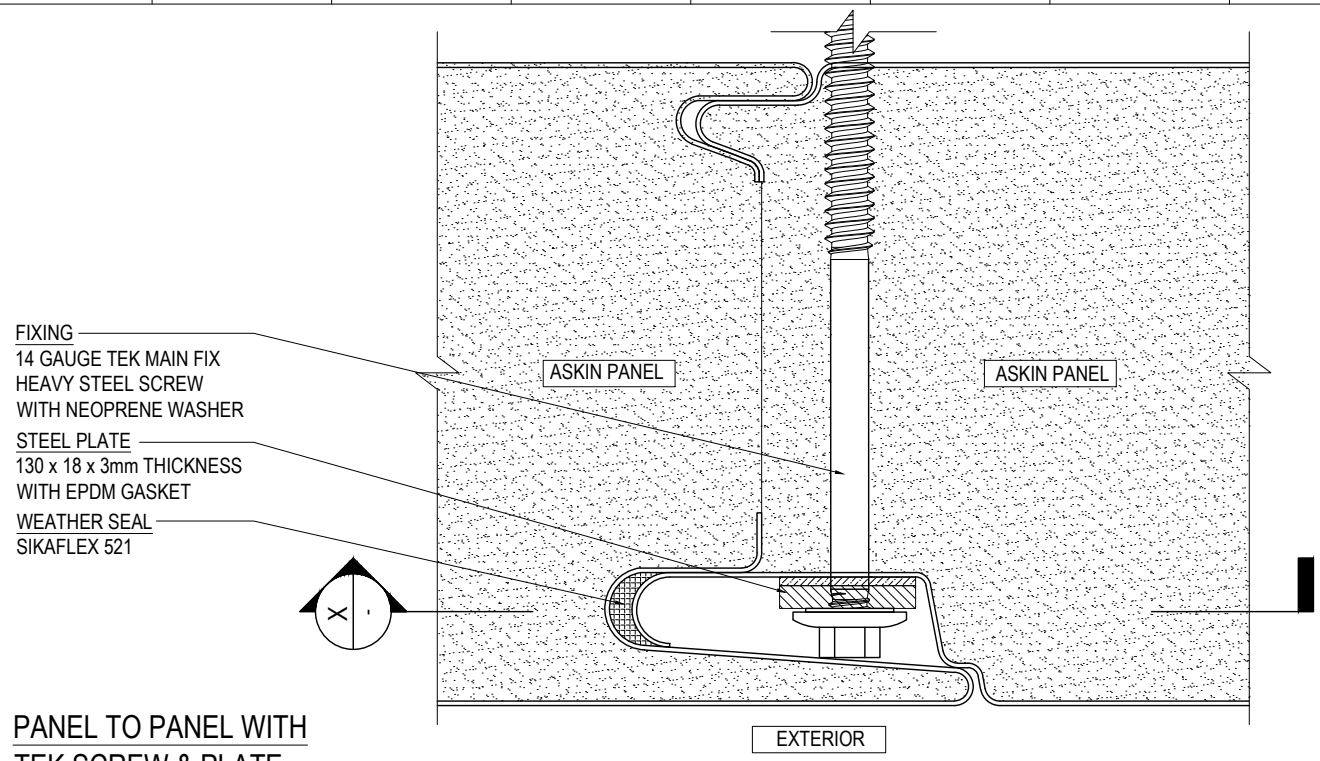

PANEL TO PANEL WITH TEK SCREW & PLATE

SCALE 1:1

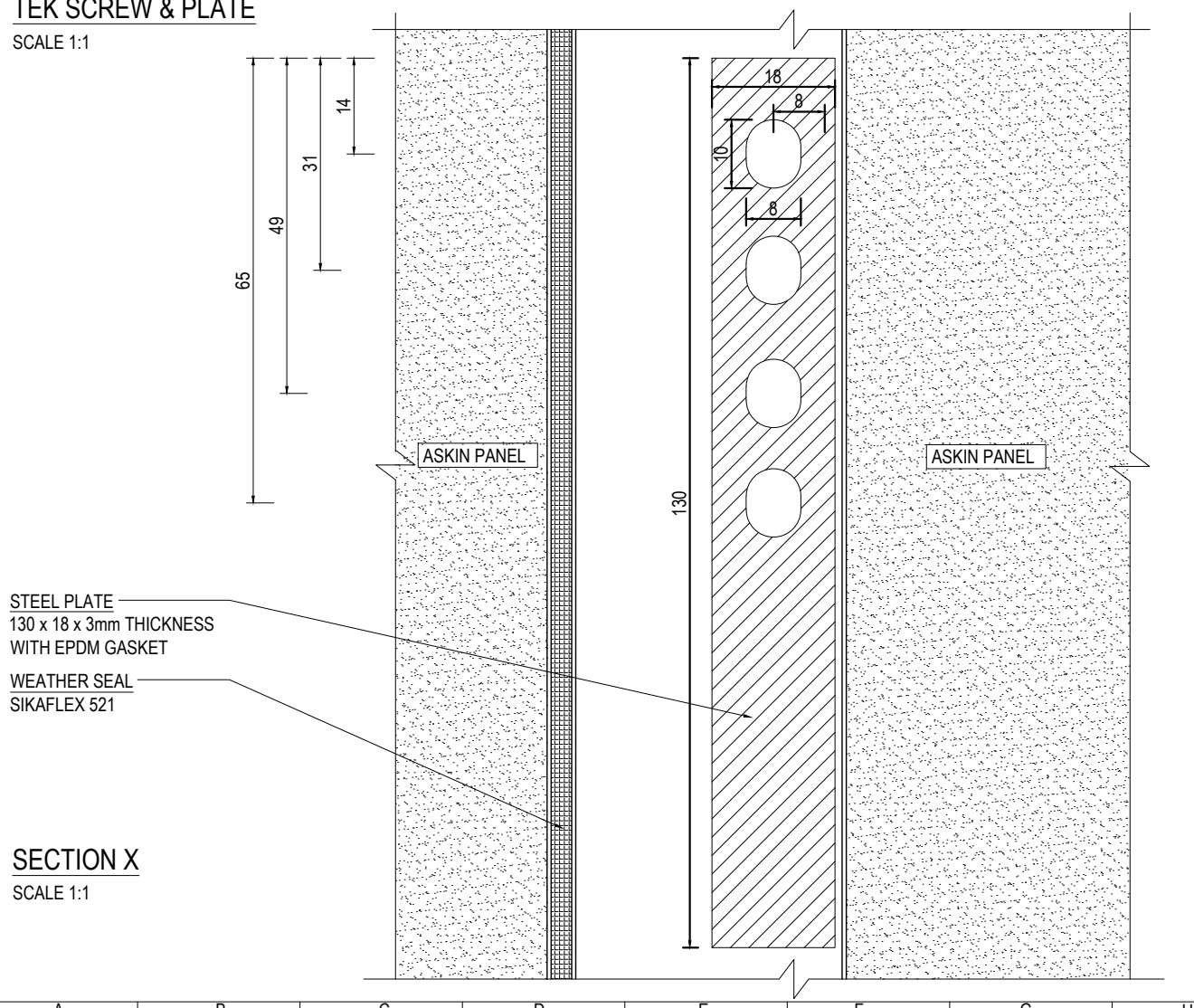

SECTION X

SCALE 1:1

ASKIN Performance Panels

www.askin.net.au

VIC P : 03 8769 4816 WA P : 08 9249 4022
SA P : 08 8252 7188 QLD P : 07 3718 9500
NSW P : 02 8825 2598 NT P : 08 8252 7188

PROJECT:

EXTERIORS - VIVID

PANEL TO PANEL JOINT

©ASKIN 2022

Revision		
-	-	-
-	-	-
-	-	-
-	-	-
-	-	-
-	-	-
-	-	-

Checked By: A SHANNON	Scale: 1:1
Drawn By: R VORWERK	Sheet size: A4
Issue date: 09.09.2022	Revision: -
Drawing No.	EXTVIVID - 001

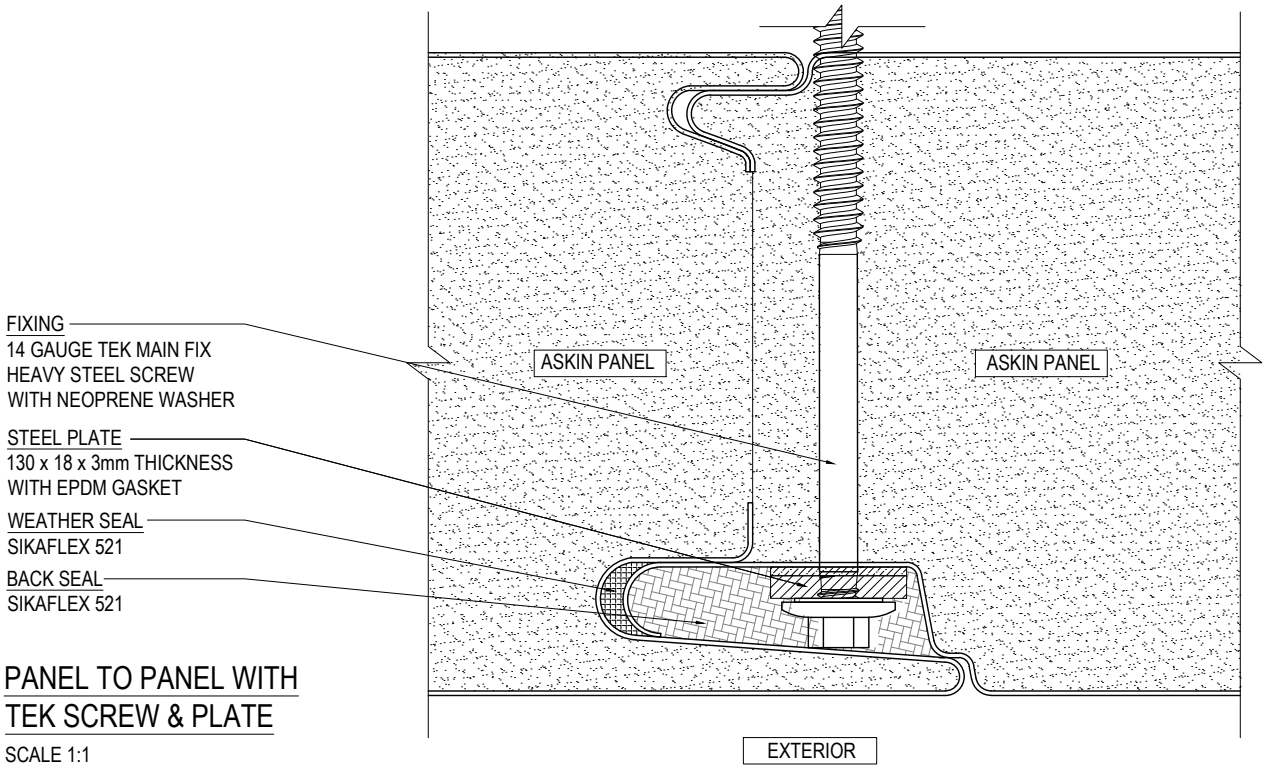

PANEL TO PANEL WITH TEK SCREW & PLATE

SCALE 1:1

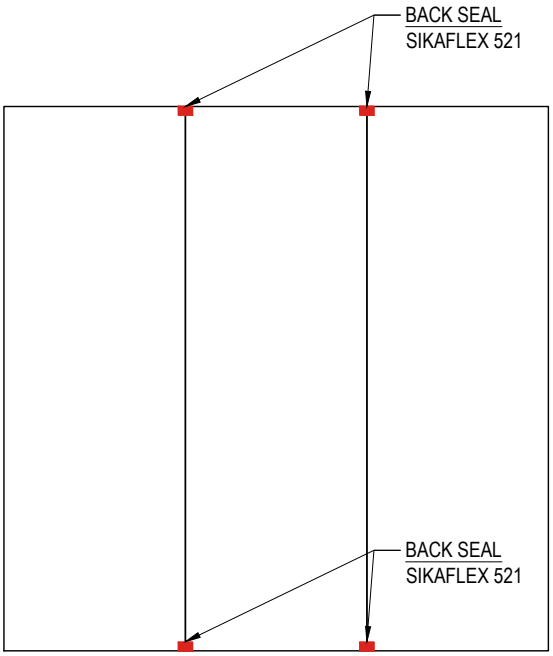

VERTICAL PANEL BACK SEAL LOCATIONS

SCALE NTS

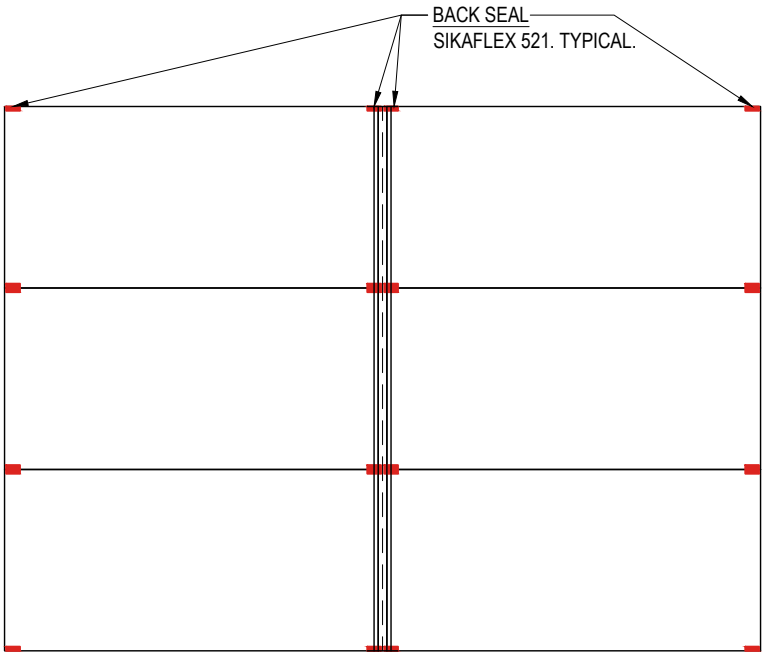

HORIZONTAL PANEL BACK SEAL LOCATIONS

SCALE NTS

ASKIN Performance Panels
www.askin.net.au
VIC P : 03 8769 4816 WA P : 08 9249 4022
SA P : 08 8252 7188 QLD P : 07 3718 9500
NSW P : 02 8825 2598 NT P : 08 8252 7188

PROJECT:

EXTERIORS - VIVID

PANEL TO PANEL JOINT

©ASKIN 2022

Revision		
-	-	-
-	-	-
-	-	-
-	-	-
-	-	-
-	-	-
-	-	-

Checked By: A SHANNON	Scale: 1:1
Drawn By: R VORWERK	Sheet size: A4
Issue date: 09.09.2022	Revision: -
Drawing No.	EXTVIVID - 002

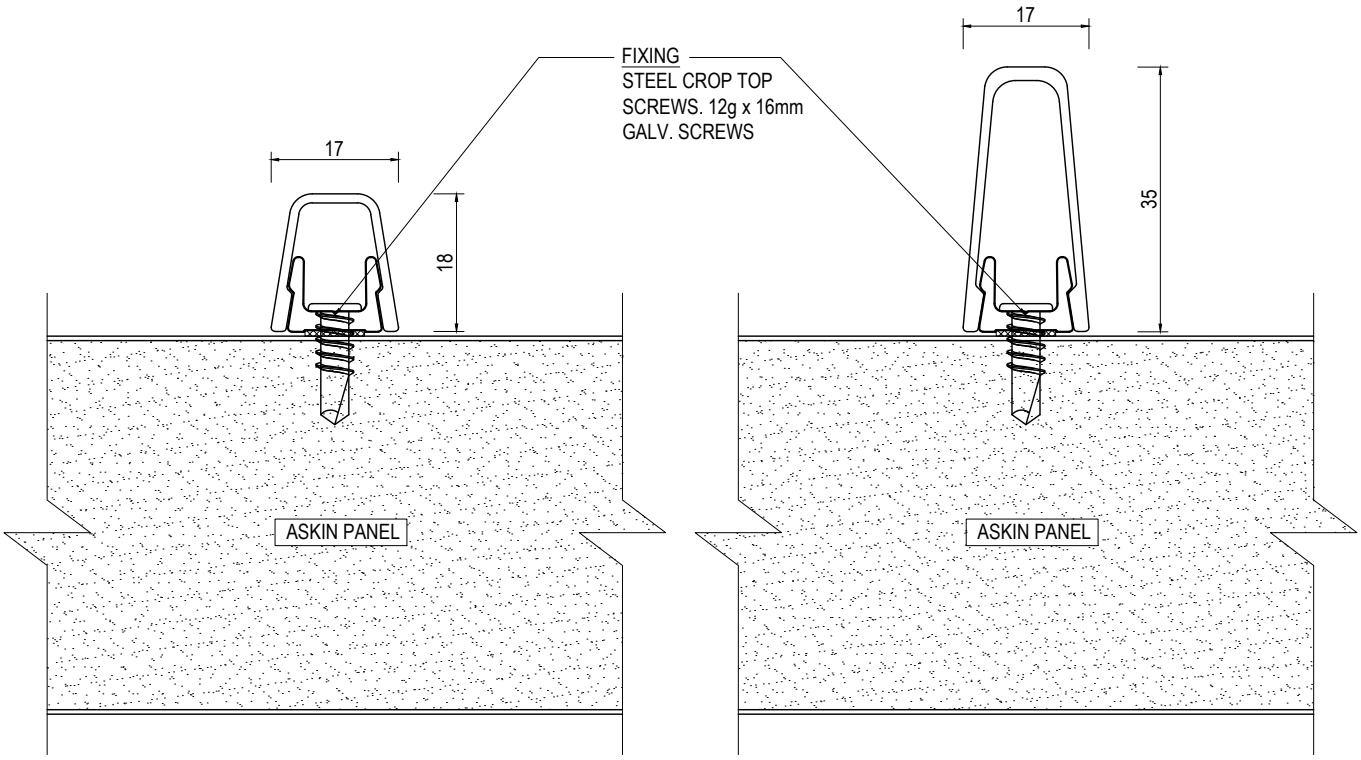

#18 ROSANNA RIB PROFILE

SCALE 1:1

#35 ROSANNA RIB PROFILE

SCALE 1:1

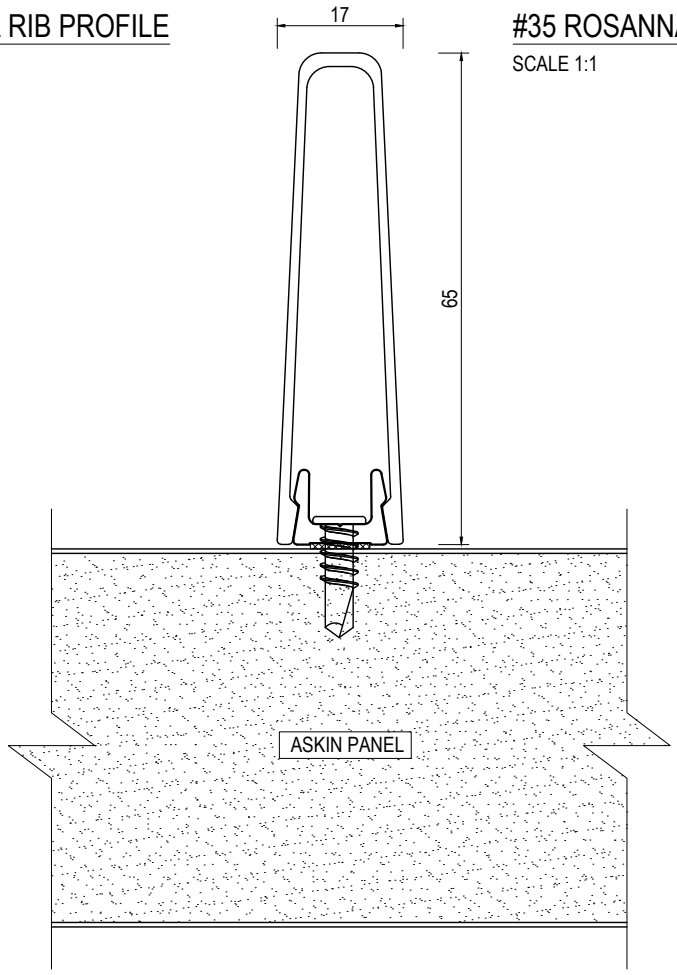

#65 ROSANNA RIB PROFILE

SCALE 1:1

ASKIN Performance Panels
www.askin.net.au
VIC P : 03 8769 4816 WA P : 08 9249 4022
SA P : 08 8252 7188 QLD P : 07 3718 9500
NSW P : 02 8825 2598 NT P : 08 8252 7188

PROJECT:

EXTERIORS - VIVID

PANEL TO PANEL JOINT

©ASKIN 2022

Revision		
-	-	-
-	-	-
-	-	-
-	-	-
-	-	-
-	-	-
-	-	-

Checked By: A SHANNON	Scale: 1:1
Drawn By: R VORWERK	Sheet size: A4
Issue date: 09.09.2022	Revision: -
Drawing No.	EXTVIVID - 003

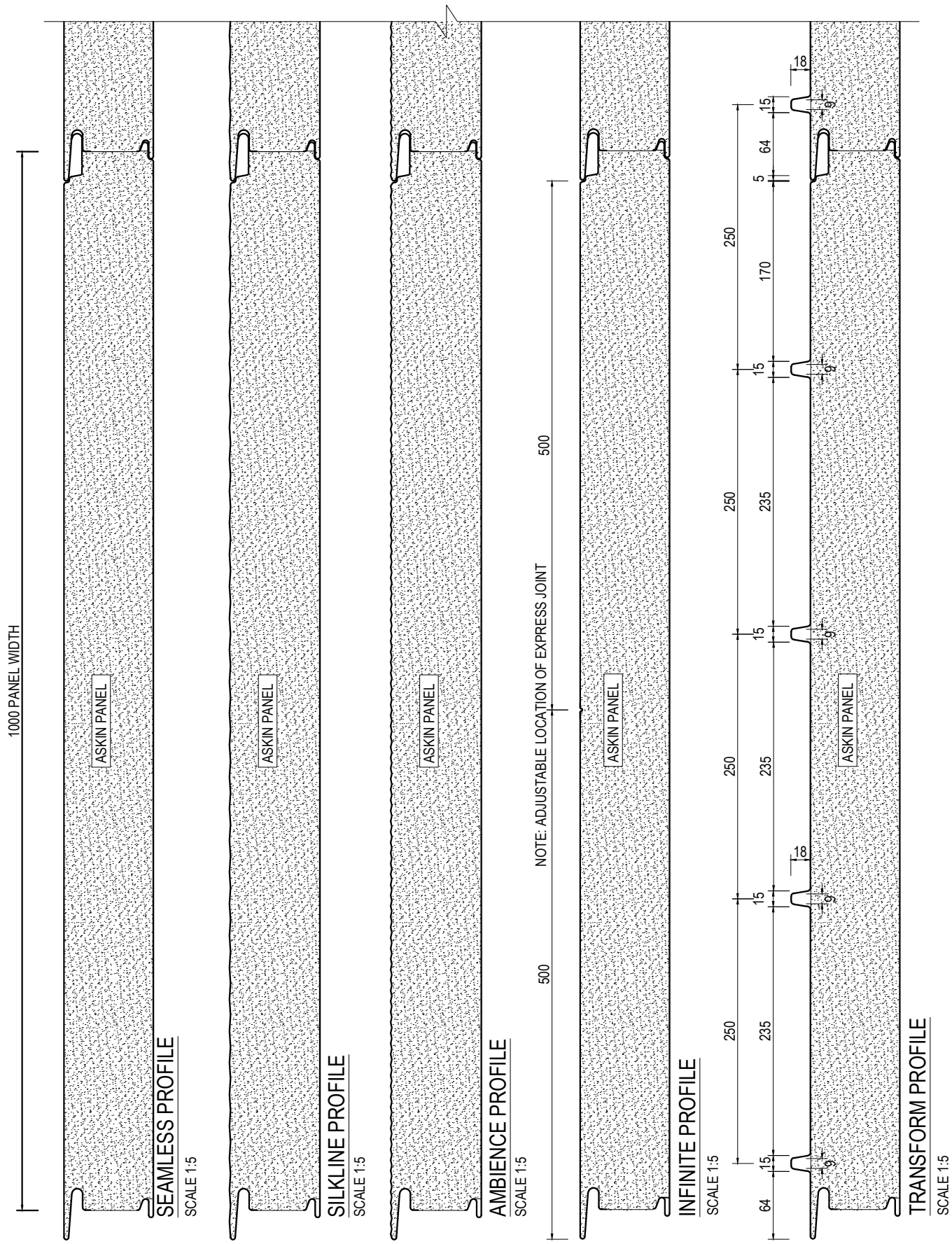

ASKIN Performance Panels

www.askin.net.au

VIC P : 03 8769 4816 WA P : 08 9249 4022
SA P : 08 8252 7188 QLD P : 07 3718 9500
NSW P : 02 8825 2598 NT P : 08 8252 7188

PROJECT:

EXTERIORS - VIVID

PANEL PROFILES

©ASKIN 2022

Revision		
-	-	-
-	-	-
-	-	-
-	-	-
-	-	-
-	-	-
-	-	-

Checked By: A SHANNON	Scale: 1:5
Drawn By: R VORWERK	Sheet size: A4
Issue date: 09.09.2022	Revision: -
Drawing No.	EXTVIVID - 005

SEAMLESS PROFILE
SCALE 1:2

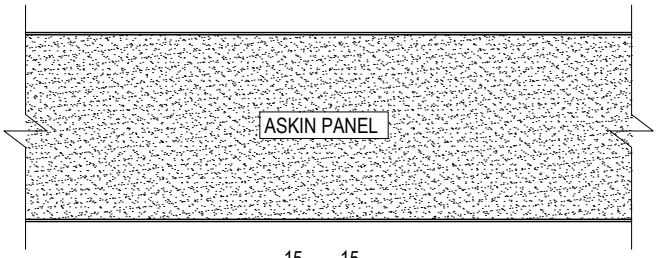

SILKLINE PROFILE
SCALE 1:2

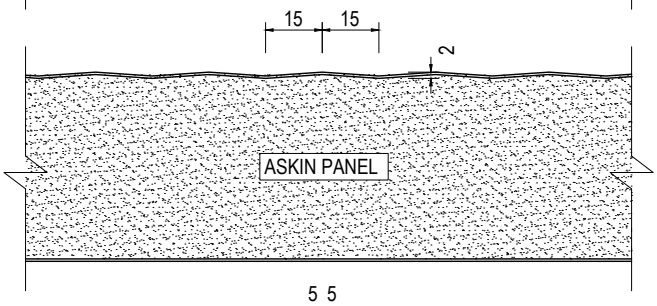

AMBIENCE PROFILE
SCALE 1:2

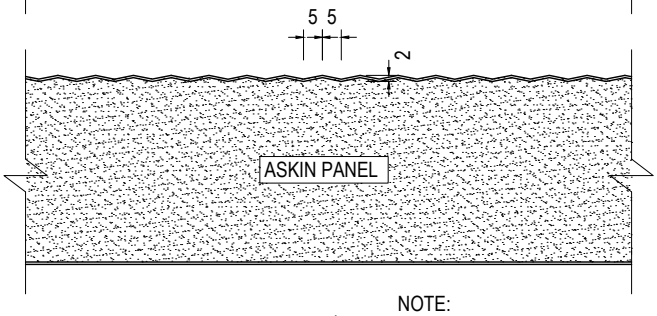

INFINITE PROFILE
SCALE 1:2

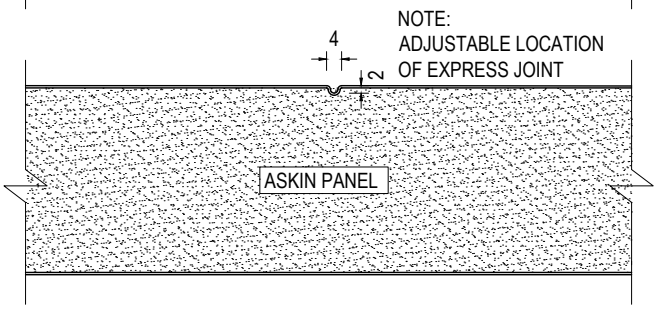

NOTE:
ADJUSTABLE LOCATION
OF EXPRESS JOINT

TRANSFORM PROFILE
SCALE 1:2

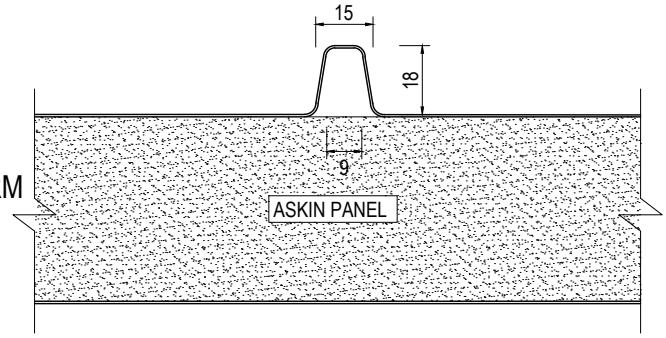

ASKIN Performance Panels
www.askin.net.au
VIC P : 03 8769 4816 WA P : 08 9249 4022
SA P : 08 8252 7188 QLD P : 07 3718 9500
NSW P : 02 8825 2598 NT P : 08 8252 7188

PROJECT:
EXTERIORS - VIVID
PANEL PROFILES

©ASKIN 2022

Revision

-	-	-
-	-	-
-	-	-
-	-	-
-	-	-
-	-	-
-	-	-

Checked By: A SHANNON	Scale: 1:2
Drawn By: R VORWERK	Sheet size: A4
Issue date: 09.09.2022	Revision: -
Drawing No.	EXTVIVID - 006

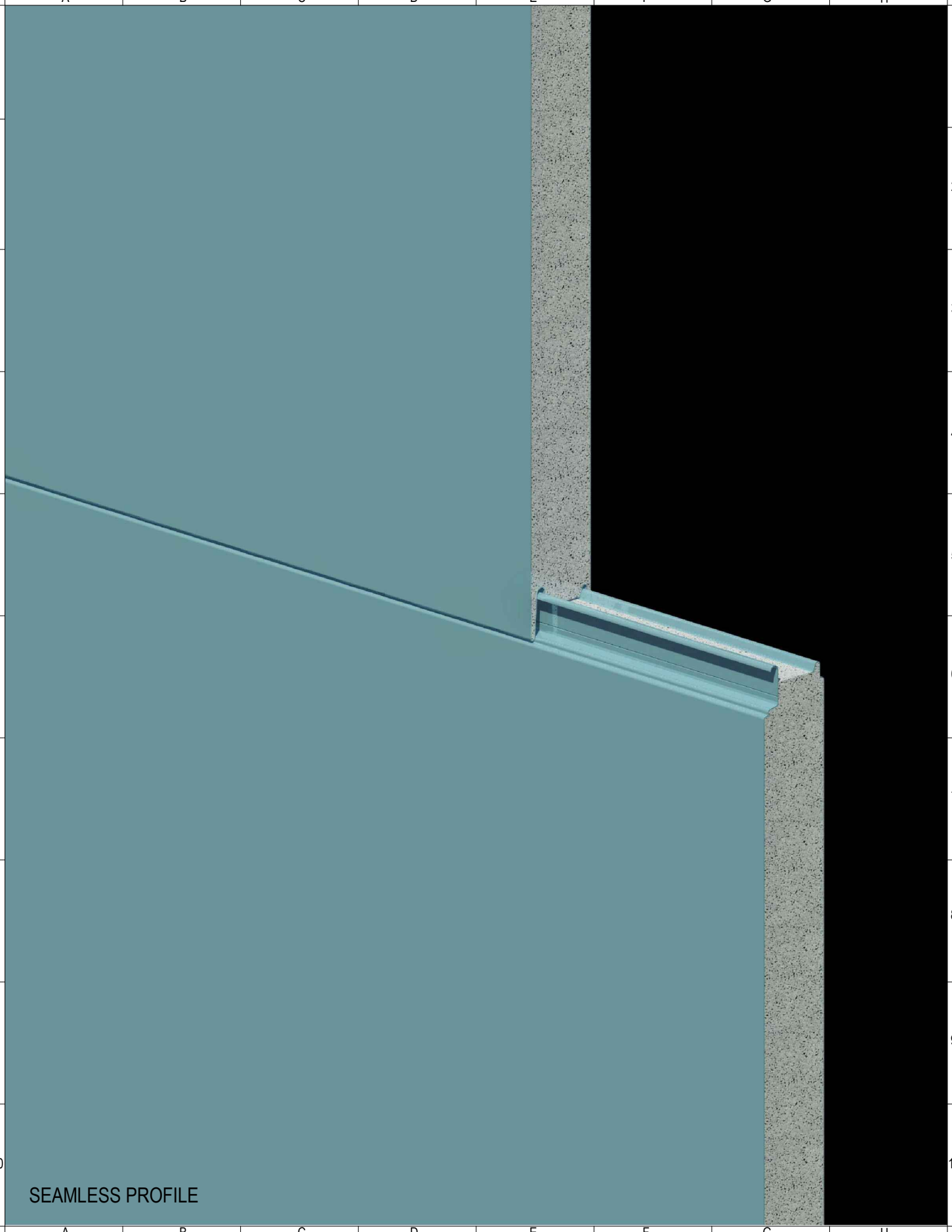

ASKIN™ Performance Panels

www.askin.net.au

VIC	P : 03 8769 4816	WA	P : 08 9249 4022
SA	P : 08 8252 7188	QLD	P : 07 3718 9500
NSW	P : 02 8825 2598	NT	P : 08 8252 7188

PROJECT:

EXTERIORS - VIVID

SEAMLESS PROFILE

©ASKIN 2022

Revision

-	-	-
-	-	-
-	-	-
-	-	-
-	-	-
-	-	-
-	-	-

Checked By A SHANNON	*Scale* NTS
Drawn By R VORWERK	*Sheet size* A4
Issue date 09.09.2022	*Revision* -
Drawing No. EXTVIVID - 010	

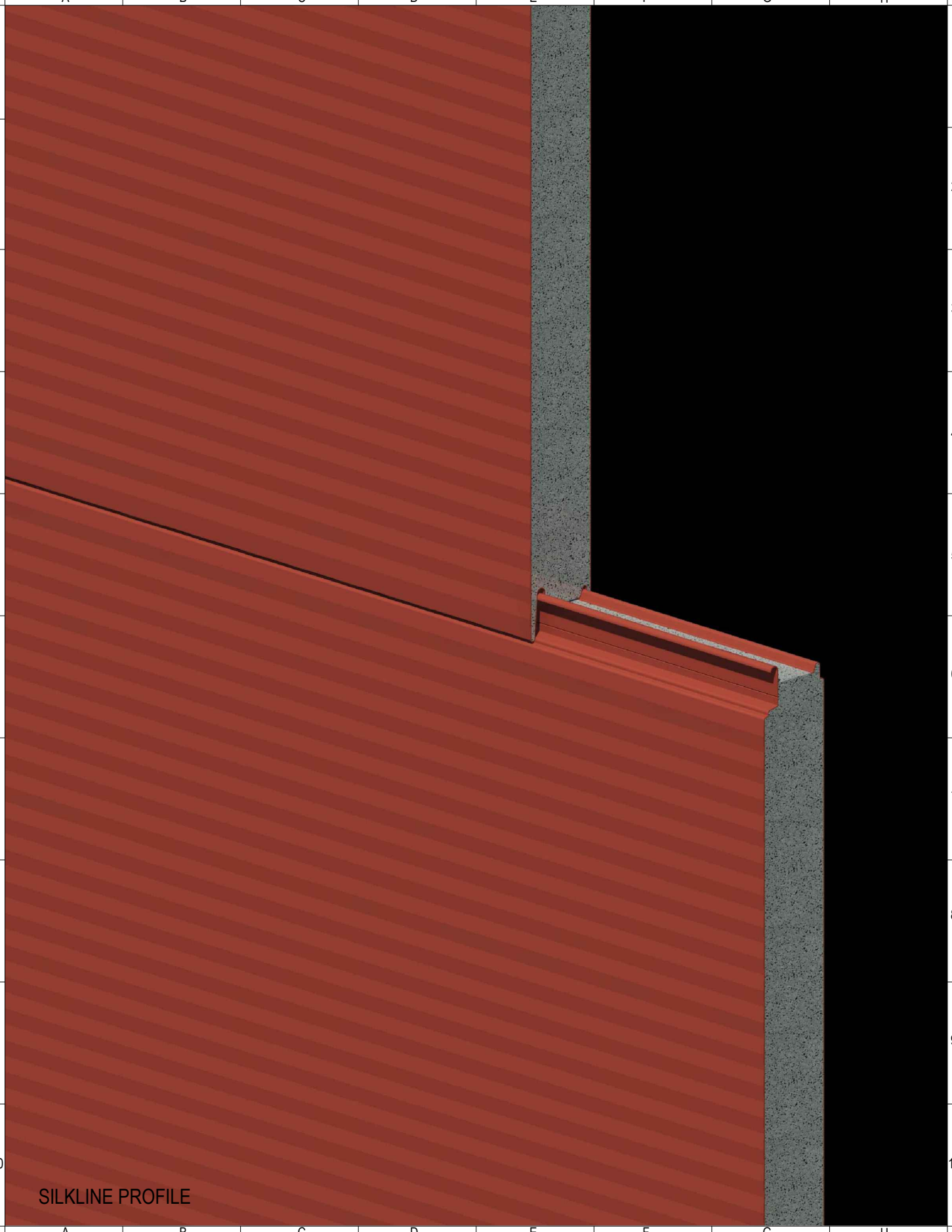

ASKIN™ Performance Panels

www.askin.net.au

VIC P : 03 8769 4816 WA P : 08 9249 4022
SA P : 08 8252 7188 QLD P : 07 3718 9500
NSW P : 02 8825 2598 NT P : 08 8252 7188

PROJECT:

EXTERIORS - VIVID

SILKLINE PROFILE

©ASKIN 2022

Revision

-	-	-
-	-	-
-	-	-
-	-	-
-	-	-
-	-	-
-	-	-

Checked By: A SHANNON	Scale: NTS
Drawn By: R VORWERK	Sheet size: A4
Issue date: 09.09.2022	Revision: -
Drawing No.	

EXTVIVID - 011

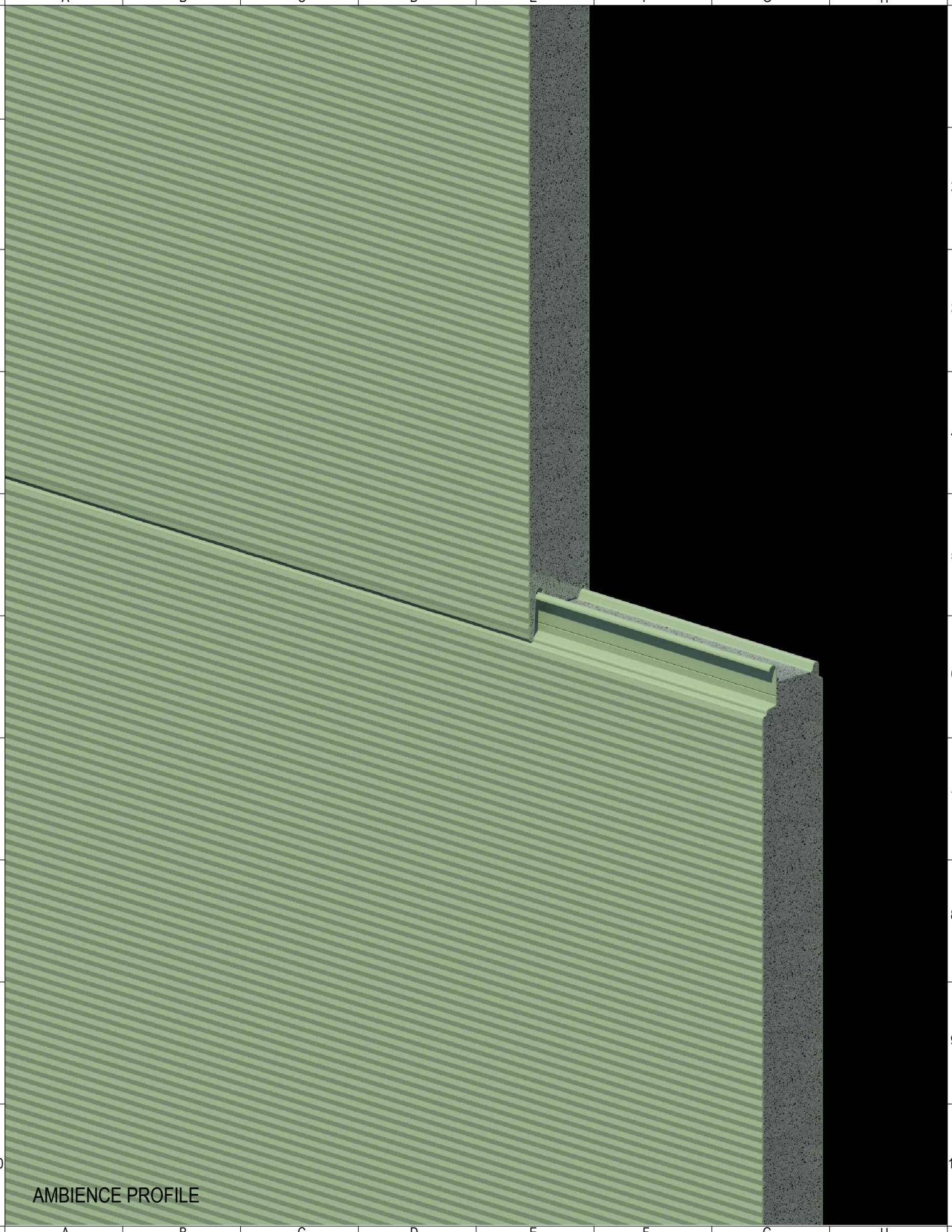

ASKIN™ Performance Panels

www.askin.net.au
VIC P : 03 8769 4816 WA P : 08 9249 4022
SA P : 08 8252 7188 QLD P : 07 3718 9500
NSW P : 02 8825 2598 NT P : 08 8252 7188

PROJECT:

EXTERIORS - VIVID

AMBIENCE PROFILE

©ASKIN 2022

Revision

-	-	-
-	-	-
-	-	-
-	-	-
-	-	-
-	-	-
-	-	-

Checked By: A SHANNON	Scale: NTS
Drawn By: R VORWERK	Sheet size: A4
Issue date: 09.09.2022	Revision: -
Drawing No.	

EXTVIVID - 012

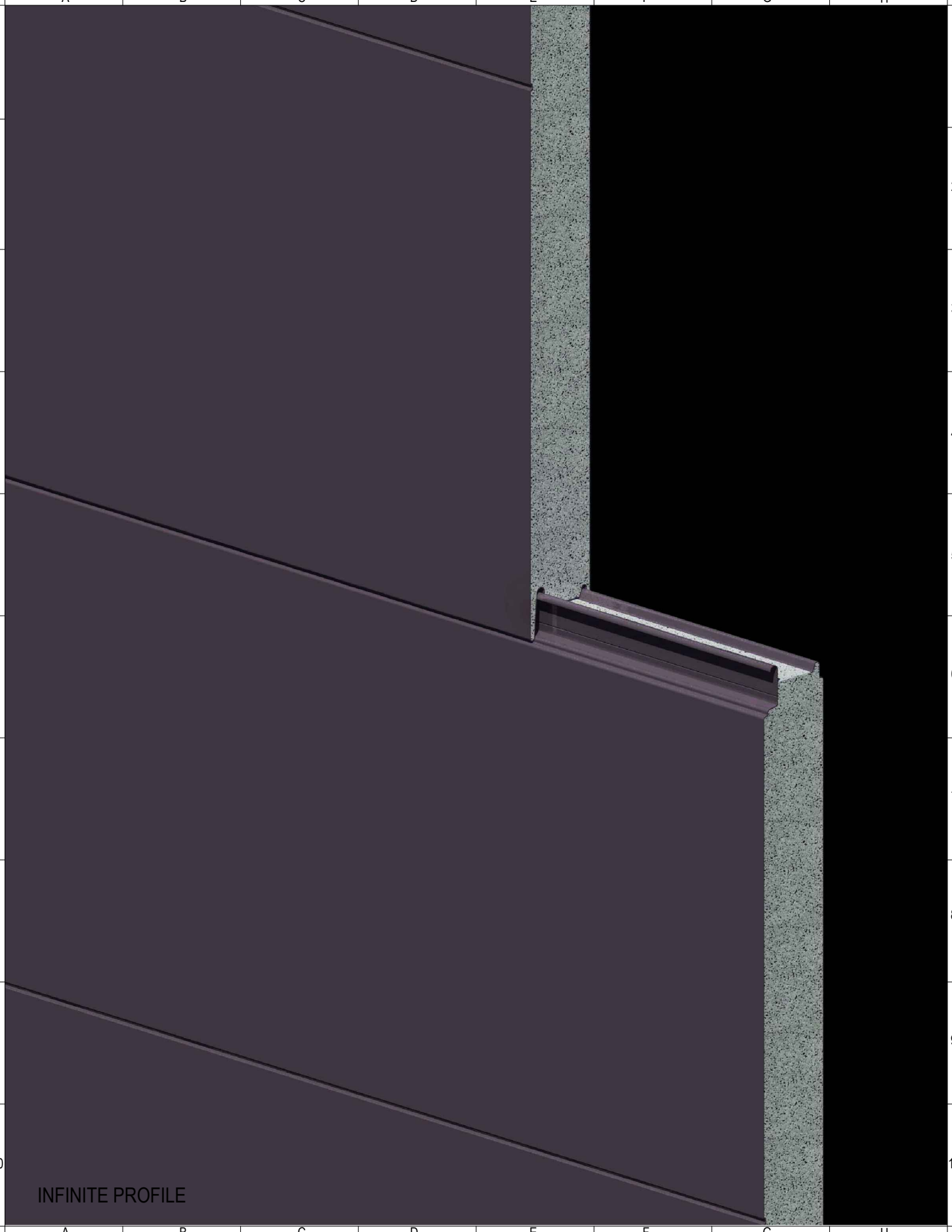

ASKIN™ Performance Panels

www.askin.net.au
VIC P : 03 8769 4816 WA P : 08 9249 4022
SA P : 08 8252 7188 QLD P : 07 3718 9500
NSW P : 02 8825 2598 NT P : 08 8252 7188

PROJECT:

EXTERIORS - VIVID

INFINITE PROFILE

©ASKIN 2022

Revision

-	-	-
-	-	-
-	-	-
-	-	-
-	-	-
-	-	-
-	-	-

Checked By A SHANNON	*Scale* NTS
Drawn By R VORWERK	*Sheet size* A4
Issue date 09.09.2022	*Revision* -
Drawing No. EXTVIVID - 013	

ASKIN™ Performance Panels

www.askin.net.au

VIC	P : 03 8769 4816	WA	P : 08 9249 4022
SA	P : 08 8252 7188	QLD	P : 07 3718 9500
NSW	P : 02 8825 2598	NT	P : 08 8252 7188

PROJECT:

EXTERIORS - VIVID

TRANSFORM PROFILE

©ASKIN 2022

Revision

-	-	-
-	-	-
-	-	-
-	-	-
-	-	-
-	-	-
-	-	-

Checked By A SHANNON	*Scale* NTS
Drawn By R VORWERK	*Sheet size* A4
Issue date 09.09.2022	*Revision* -
Drawing No. EXTVIVID - 014	

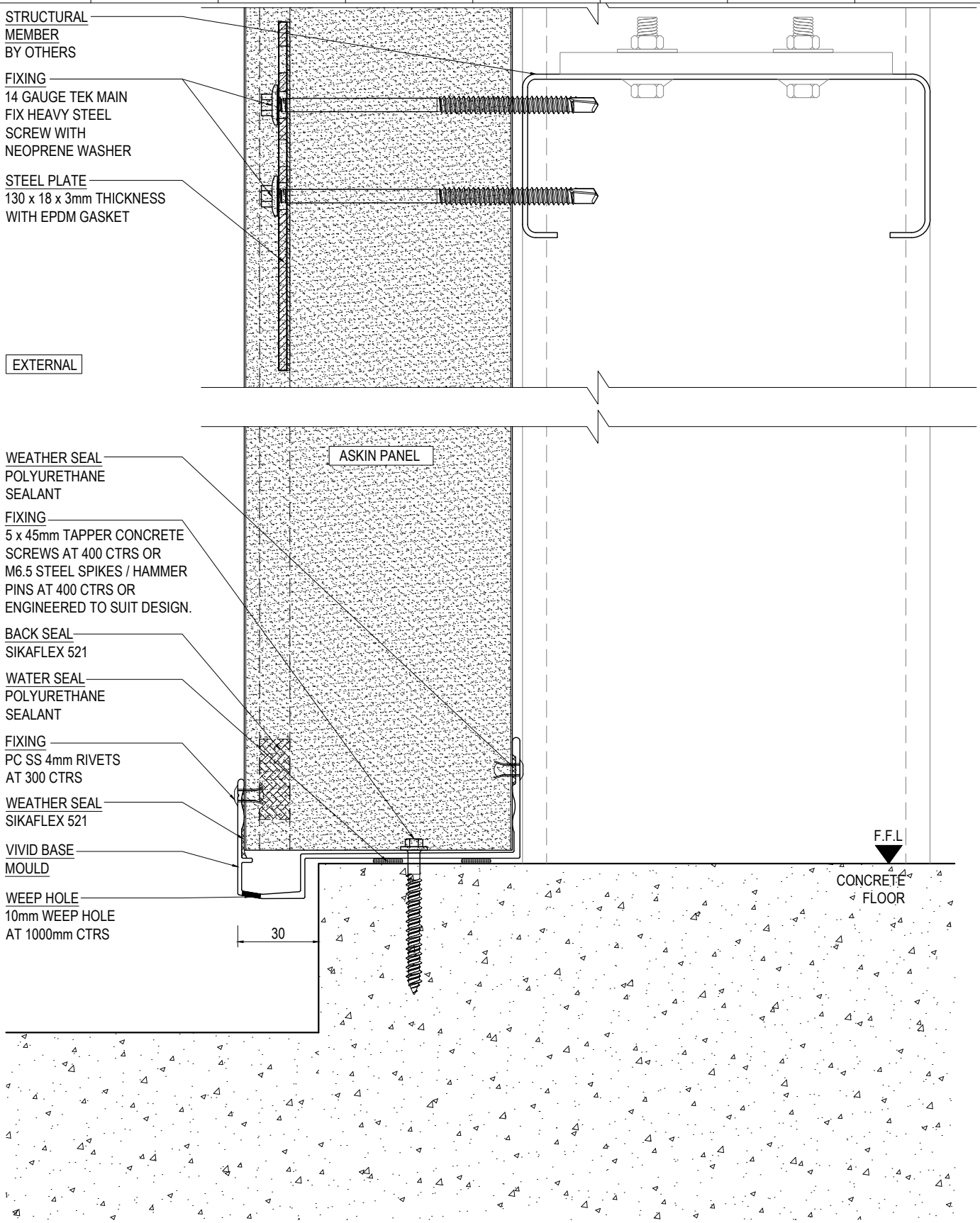

WALL TO FLOOR CONNECTION DETAIL - SECTION VIEW

SCALE 1:2

ASKIN Performance Panels

www.askin.net.au

VIC	P : 03 8769 4816	WA	P : 08 9249 4022
SA	P : 08 8252 7188	QLD	P : 07 3718 9500
NSW	P : 02 8825 2598	NT	P : 08 8252 7188

PROJECT:

EXTERIORS - VIVID

STANDARD VERTICAL WALL TO FLOOR CONNECTION DETAIL

©ASKIN 2022

Revision		
-	-	-
-	-	-
-	-	-
-	-	-
-	-	-
-	-	-
-	-	-

Checked By: A SHANNON	Scale: 1:2
Drawn By: R VORWERK	Sheet size: A4
Issue date: 09.09.2022	Revision: -
Drawing No.	EXTVIVID - 100

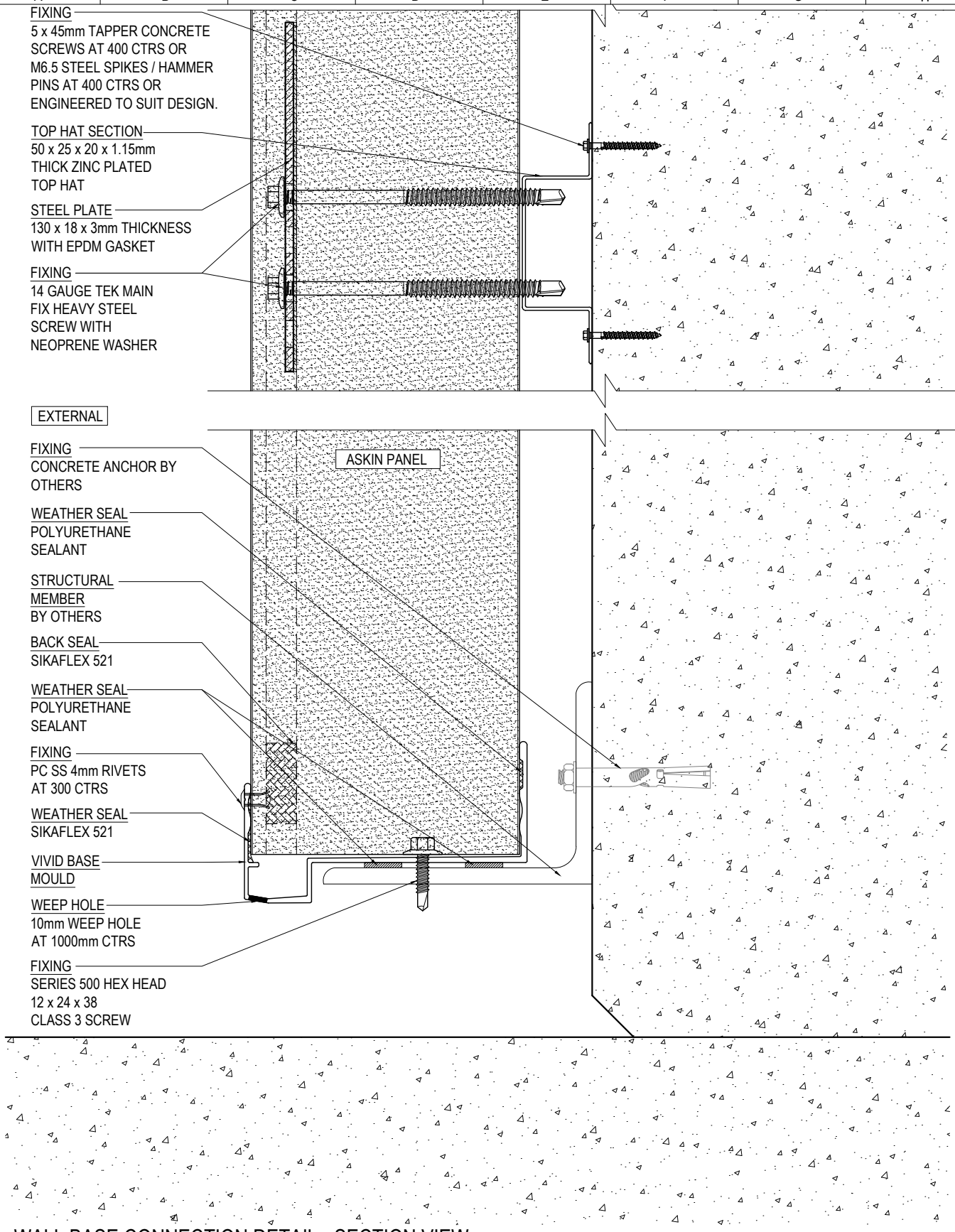

WALL BASE CONNECTION DETAIL - SECTION VIEW

SCALE 1:2

ASKIN Performance Panels

www.askin.net.au

VIC	P : 03 8769 4816	WA	P : 08 9249 4022
SA	P : 08 8252 7188	QLD	P : 07 3718 9500
NSW	P : 02 8825 2598	NT	P : 08 8252 7188

PROJECT:

EXTERIORS - VIVID

STANDARD VERTICAL WALL TO FLOOR CONNECTION DETAIL

©ASKIN 2022

Revision

-	-	-
-	-	-
-	-	-
-	-	-
-	-	-
-	-	-
-	-	-

Checked By: A SHANNON	Scale: 1:2
Drawn By: R VORWERK	Sheet size: A4
Issue date: 09.09.2022	Revision: -
Drawing No.	EXTVIVID - 101

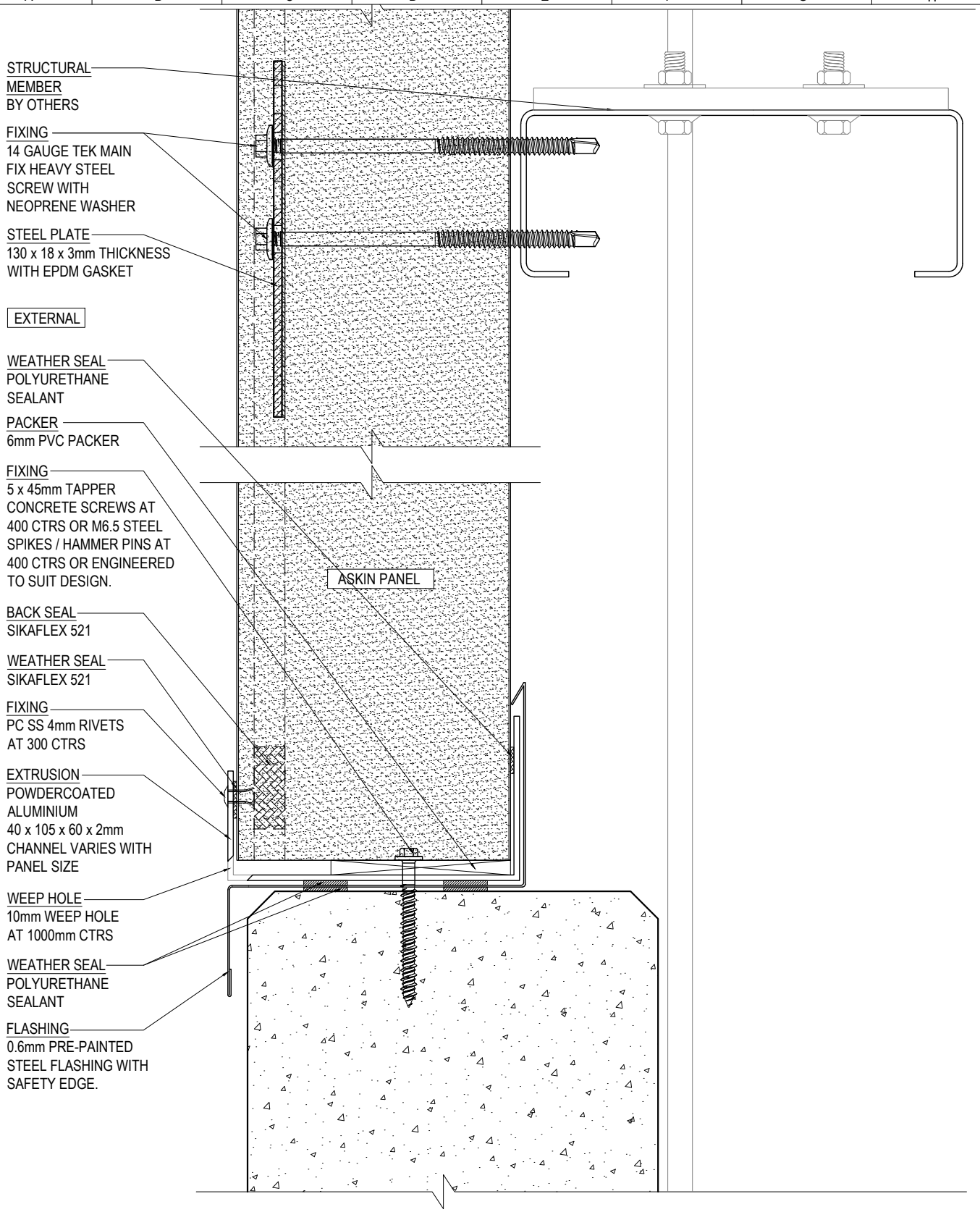

WALL TO CONCRETE PLINTH CONNECTION DETAIL - SECTION VIEW

SCALE 1:2

ASKIN Performance Panels

www.askin.net.au

VIC P : 03 8769 4816 WA P : 08 9249 4022
SA P : 08 8252 7188 QLD P : 07 3718 9500
NSW P : 02 8825 2598 NT P : 08 8252 7188

PROJECT:

EXTERIORS - VIVID

STANDARD VERTICAL WALL TO FLOOR CONNECTION DETAIL

©ASKIN 2022

Revision		
-	-	-
-	-	-
-	-	-
-	-	-
-	-	-
-	-	-
-	-	-

Checked By: A SHANNON	Scale: 1:2
Drawn By: R VORWERK	Sheet size: A4
Issue date: 09.09.2022	Revision: -
Drawing No.	EXTVIVID - 102

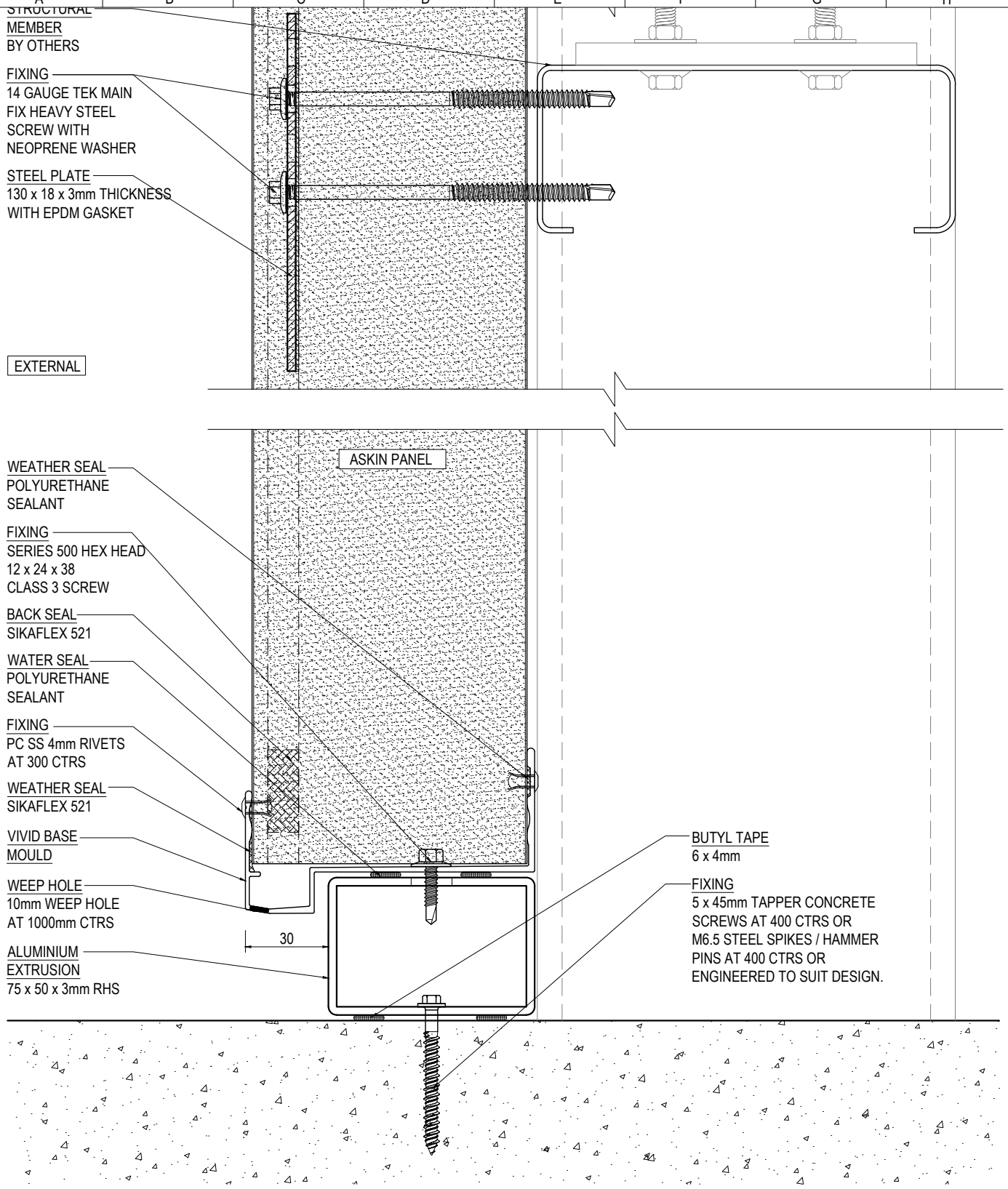

WALL TO FLOOR CONNECTION DETAIL - SECTION VIEW

SCALE 1:2

ASKIN Performance Panels
www.askin.net.au
VIC P : 03 8769 4816 WA P : 08 9249 4022
SA P : 08 8252 7188 QLD P : 07 3718 9500
NSW P : 02 8825 2598 NT P : 08 8252 7188

PROJECT:

EXTERIORS - VIVID

STANDARD VERTICAL WALL TO FLOOR CONNECTION DETAIL

©ASKIN 2022

Revision		
-	-	-
-	-	-
-	-	-
-	-	-
-	-	-
-	-	-
-	-	-

Checked By: A SHANNON	Scale: 1:2
Drawn By: R VORWERK	Sheet size: A4
Issue date: 09.09.2022	Revision: -
Drawing No.	EXTVIVID - 103

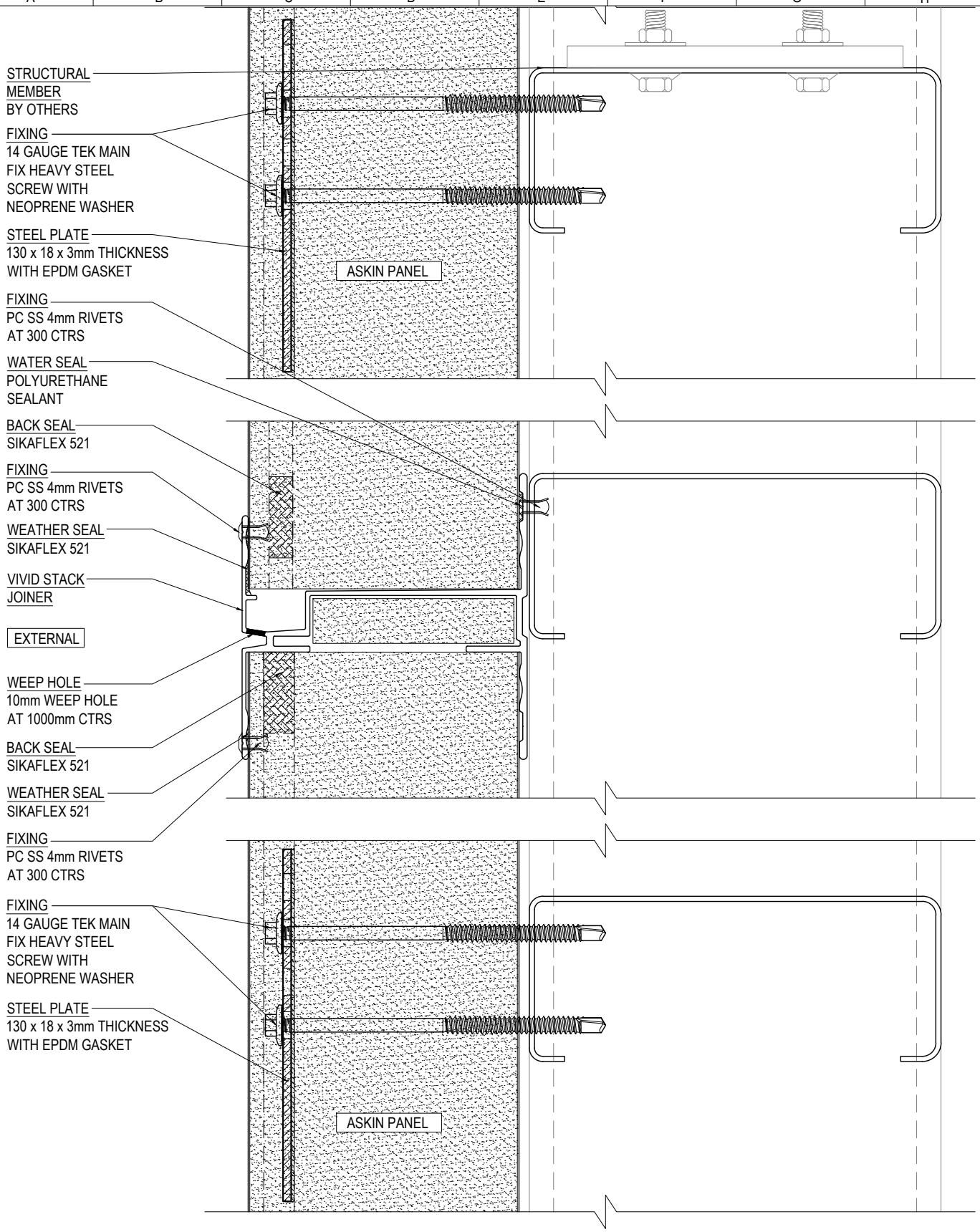

WALL TO WALL STACK JOINT CONNECTION DETAIL - SECTION VIEW

SCALE 1:2

ASKIN Performance Panels

www.askin.net.au

VIC P : 03 8769 4816 WA P : 08 9249 4022
SA P : 08 8252 7188 QLD P : 07 3718 9500
NSW P : 02 8825 2598 NT P : 08 8252 7188

PROJECT:

EXTERIORS - VIVID

STANDARD VERTICAL WALL STACK JOINT CONNECTION DETAIL

©ASKIN 2022

Revision

-	-	-
-	-	-
-	-	-
-	-	-
-	-	-
-	-	-
-	-	-

Checked By: A SHANNON	Scale: 1:2
Drawn By: R VORWERK	Sheet size: A4
Issue date: 09.09.2022	Revision: -
Drawing No.	EXTVIVID - 104

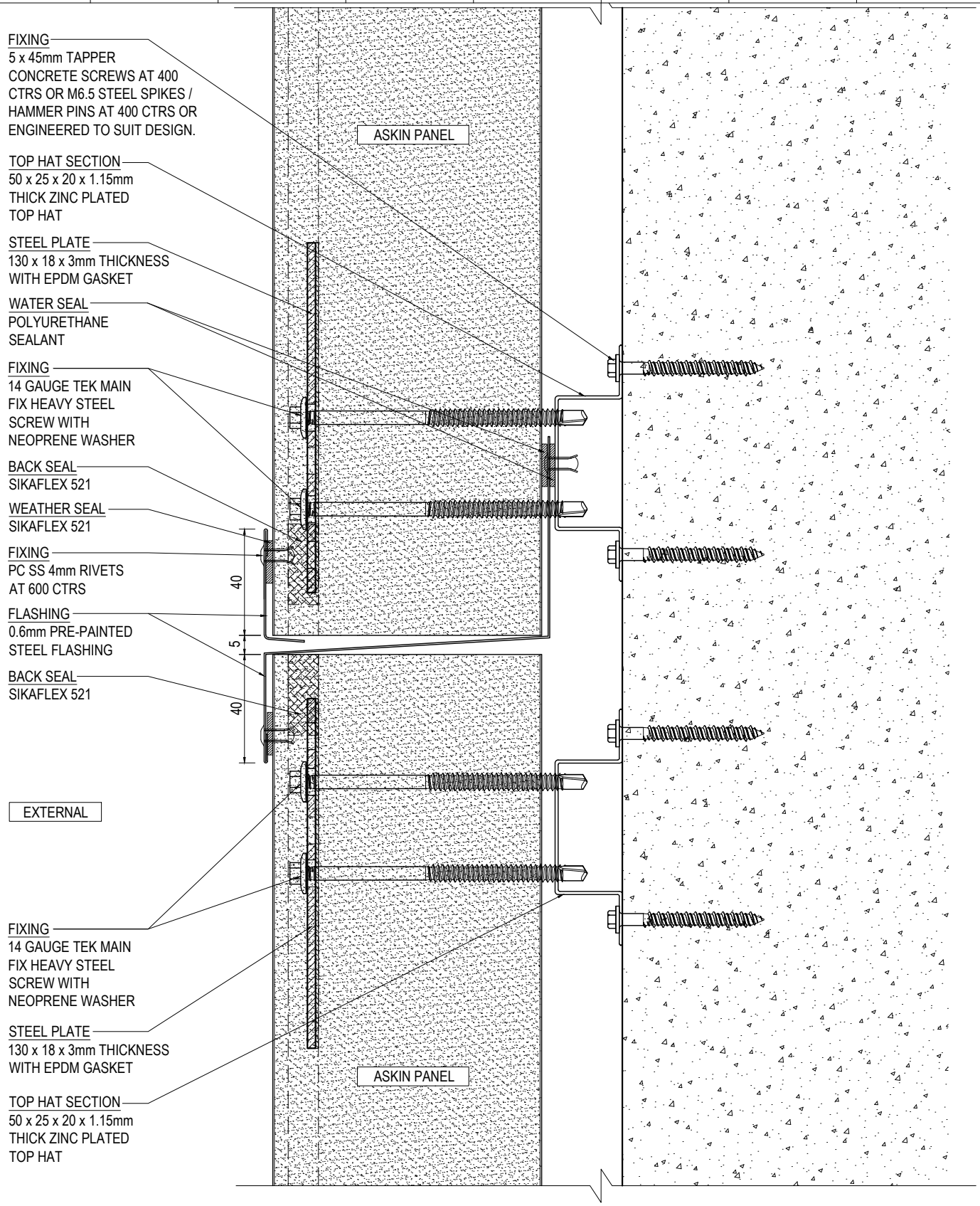

WALL TO WALL STACK JOINT CONNECTION DETAIL - SECTION VIEW

SCALE 1:2

ASKIN Performance Panels

www.askin.net.au

VIC	P : 03 8769 4816	WA	P : 08 9249 4022
SA	P : 08 8252 7188	QLD	P : 07 3718 9500
NSW	P : 02 8825 2598	NT	P : 08 8252 7188

PROJECT:

EXTERIORS - VIVID

STANDARD VERTICAL WALL STACK JOINT CONNECTION DETAIL

©ASKIN 2022

Revision

-	-	-
-	-	-
-	-	-
-	-	-
-	-	-
-	-	-
-	-	-

Checked By: A SHANNON	Scale: 1:2
Drawn By: R VORWERK	Sheet size: A4
Issue date: 09.09.2022	Revision: -
Drawing No.	EXTVIVID - 105

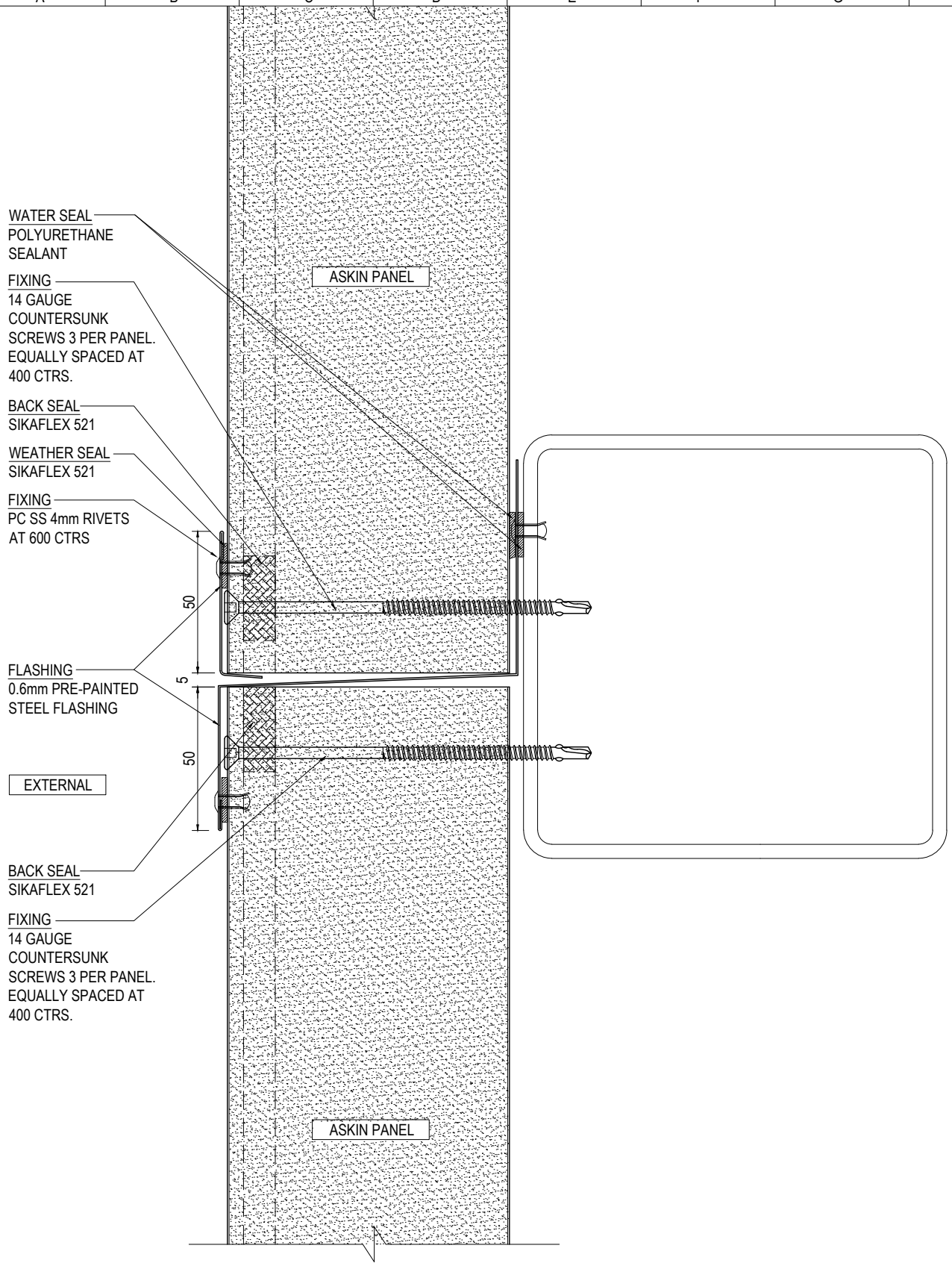

WALL TO WALL STACK JOINT CONNECTION DETAIL - SECTION VIEW

SCALE 1:2

ASKIN Performance Panels
www.askin.net.au
VIC P : 03 8769 4816 WA P : 08 9249 4022
SA P : 08 8252 7188 QLD P : 07 3718 9500
NSW P : 02 8825 2598 NT P : 08 8252 7188

PROJECT:

EXTERIORS - VIVID

STANDARD VERTICAL
WALL STACK JOINT
CONNECTION DETAIL

©ASKIN 2022

Revision		
-	-	-
-	-	-
-	-	-
-	-	-
-	-	-
-	-	-
-	-	-

Checked By: A SHANNON	Scale: 1:2
Drawn By: R VORWERK	Sheet size: A4
Issue date: 09.09.2022	Revision: -
Drawing No.	EXTVIVID - 106

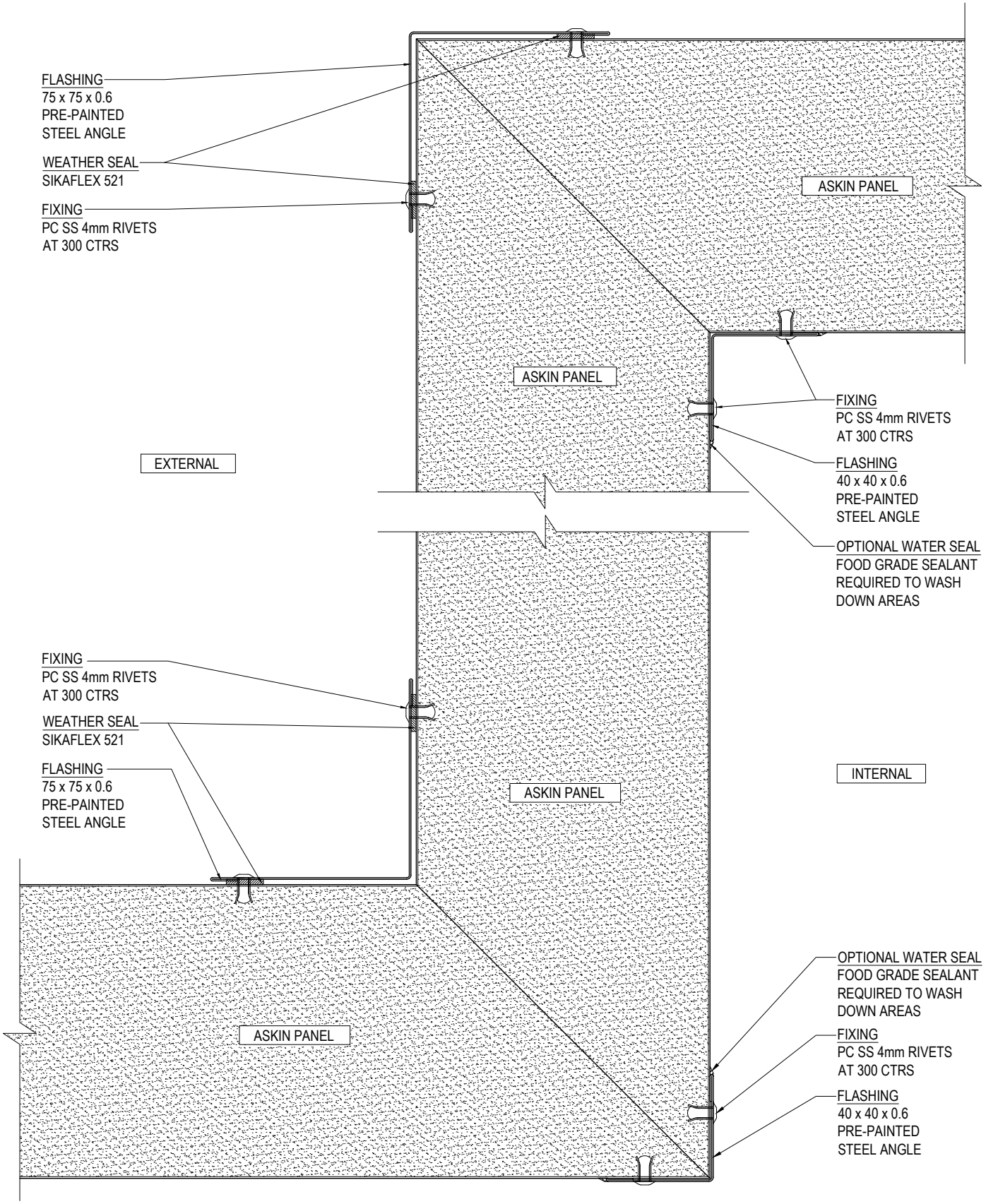

WALL TO WALL CONNECTION
DETAIL - PLAN VIEW
SCALE 1:2

ASKIN Performance Panels

www.askin.net.au

VIC	P : 03 8769 4816	WA	P : 08 9249 4022
SA	P : 08 8252 7188	QLD	P : 07 3718 9500
NSW	P : 02 8825 2598	NT	P : 08 8252 7188

PROJECT:

EXTERIORS - VIVID

STANDARD VERTICAL
WALL TO WALL
CONNECTION DETAILS

©ASKIN 2022

Revision

-	-	-
-	-	-
-	-	-
-	-	-
-	-	-
-	-	-
-	-	-

Checked By A SHANNON	*Scale* 1:2
Drawn By R VORWERK	*Sheet size* A4
Issue date 09.09.2022	*Revision* -
Drawing No. EXTVIVID - 110	

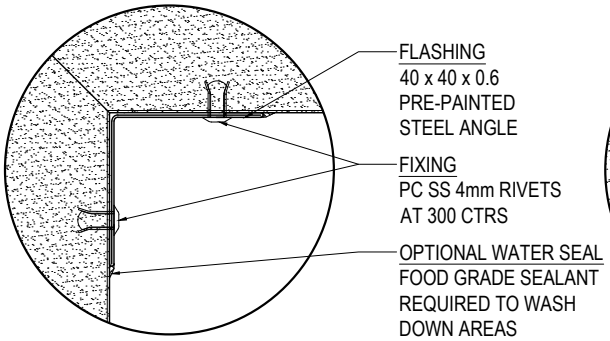

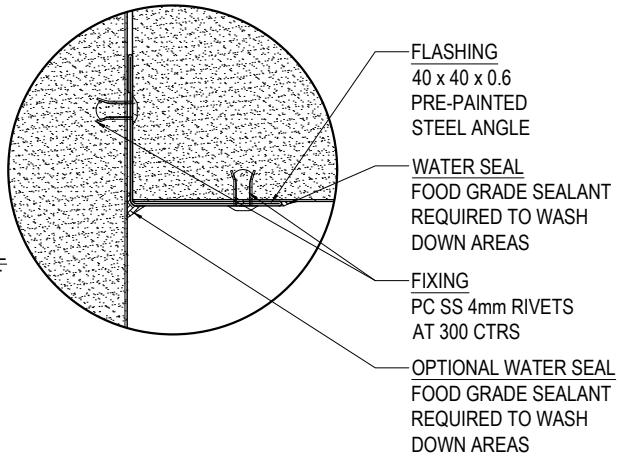

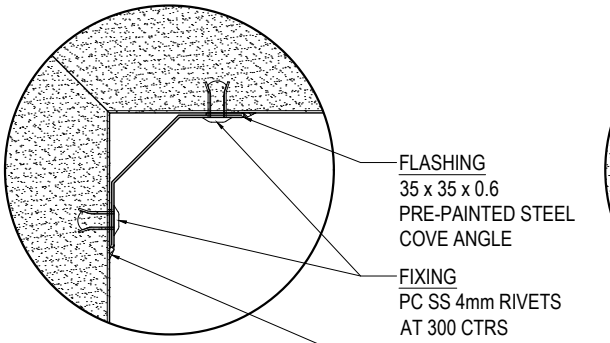

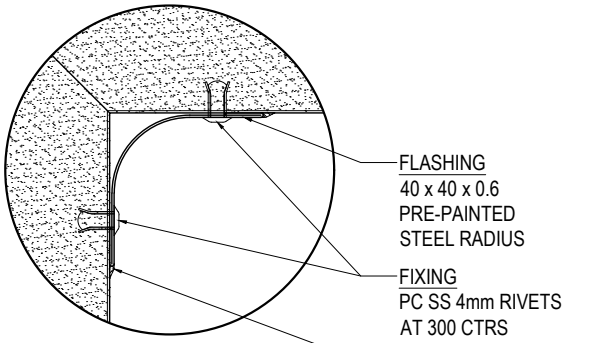

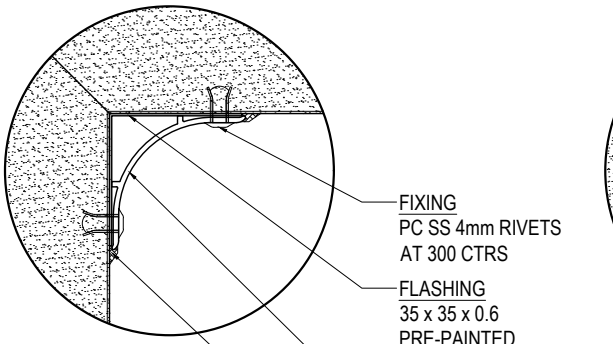

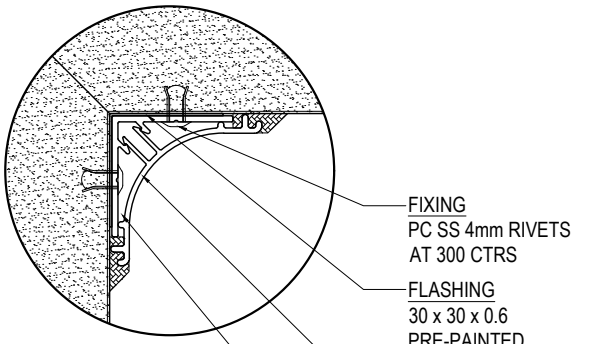

ALTERNATIVE INTERNAL CORNICES - PLAN VIEW

SCALE 1:2

ASKIN Performance Panels
www.askin.net.au
VIC P : 03 8769 4816 WA P : 08 9249 4022
SA P : 08 8252 7188 QLD P : 07 3718 9500
NSW P : 02 8825 2598 NT P : 08 8252 7188

PROJECT:

EXTERIORS - VIVID

STANDARD VERTICAL WALL TO WALL CONNECTION DETAILS

©ASKIN 2022

Revision		
-	-	-
-	-	-
-	-	-
-	-	-
-	-	-
-	-	-
-	-	-

Checked By: A SHANNON	Scale: 1:2
Drawn By: R VORWERK	Sheet size: A4
Issue date: 09.09.2022	Revision: -
Drawing No.	EXTVIVID - 111

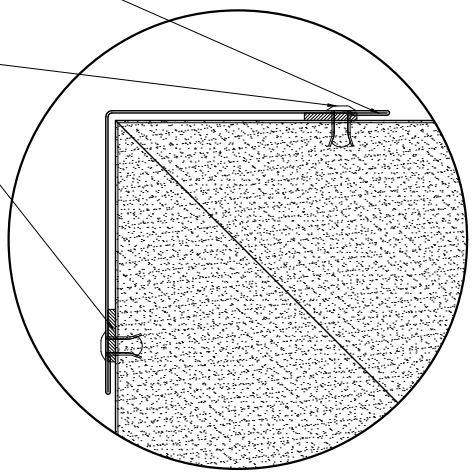

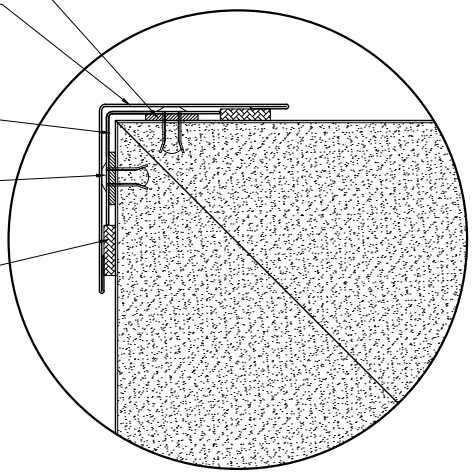

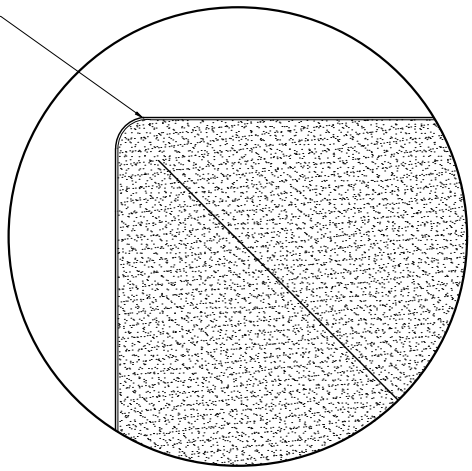

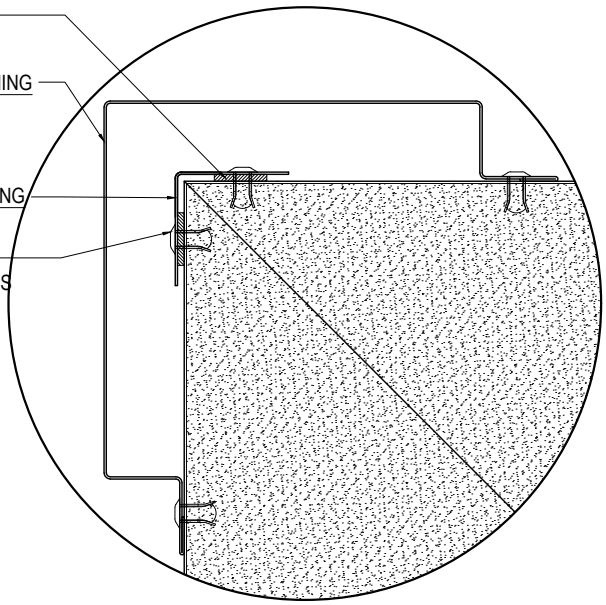

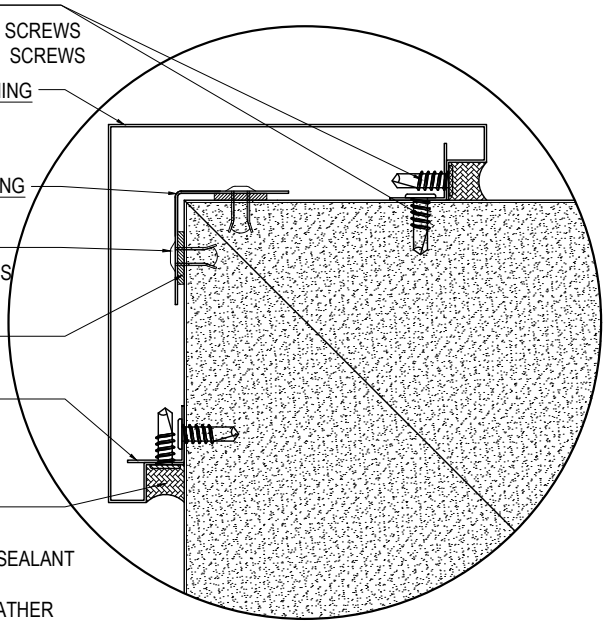

ALTERNATIVE EXTERNAL CORNER DETAILS - PLAN VIEW

SCALE 1:2

ASKIN Performance Panels
www.askin.net.au
VIC P : 03 8769 4816 WA P : 08 9249 4022
SA P : 08 8252 7188 QLD P : 07 3718 9500
NSW P : 02 8825 2598 NT P : 08 8252 7188

PROJECT:

EXTERIORS - VIVID

STANDARD VERTICAL WALL TO WALL CONNECTION DETAILS

©ASKIN 2022

Revision		
-	-	-
-	-	-
-	-	-
-	-	-
-	-	-
-	-	-
-	-	-

Checked By: A SHANNON	Scale: 1:2
Drawn By: R VORWERK	Sheet size: A4
Issue date: 09.09.2022	Revision: -
Drawing No.	EXTVIVID - 112

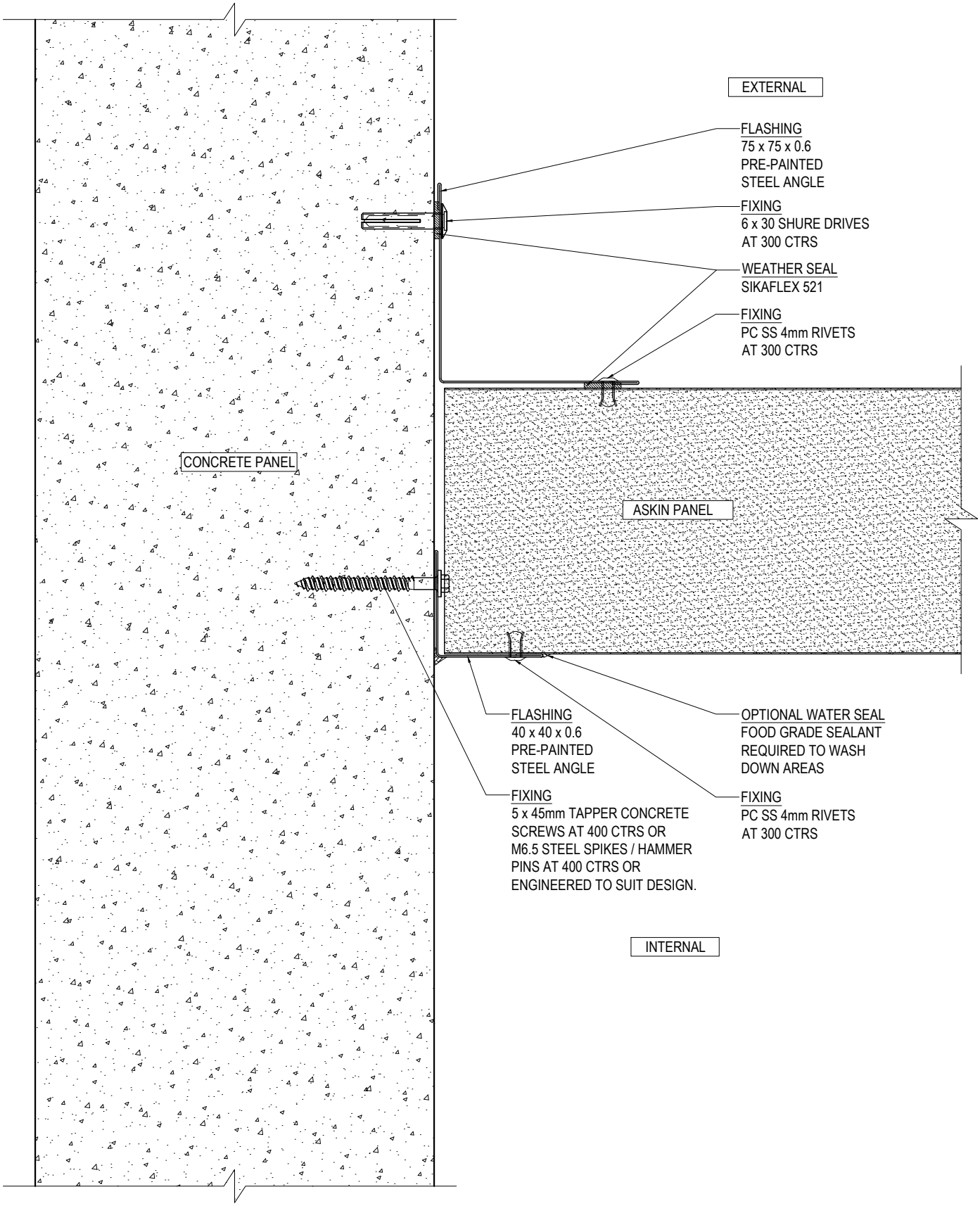

WALL TO WALL CONNECTION
DETAIL - PLAN VIEW
SCALE 1:2

ASKIN Performance Panels
www.askin.net.au
VIC P : 03 8769 4816 WA P : 08 9249 4022
SA P : 08 8252 7188 QLD P : 07 3718 9500
NSW P : 02 8825 2598 NT P : 08 8252 7188

PROJECT:
EXTERIORS - VIVID
STANDARD VERTICAL
WALL TO WALL
CONNECTION DETAILS

©ASKIN 2022

Revision		
-	-	-
-	-	-
-	-	-
-	-	-
-	-	-
-	-	-
-	-	-

Checked By: A SHANNON	Scale: 1:2
Drawn By: R VORWERK	Sheet size: A4
Issue date: 09.09.2022	Revision: -
Drawing No.	EXTVIVID - 113

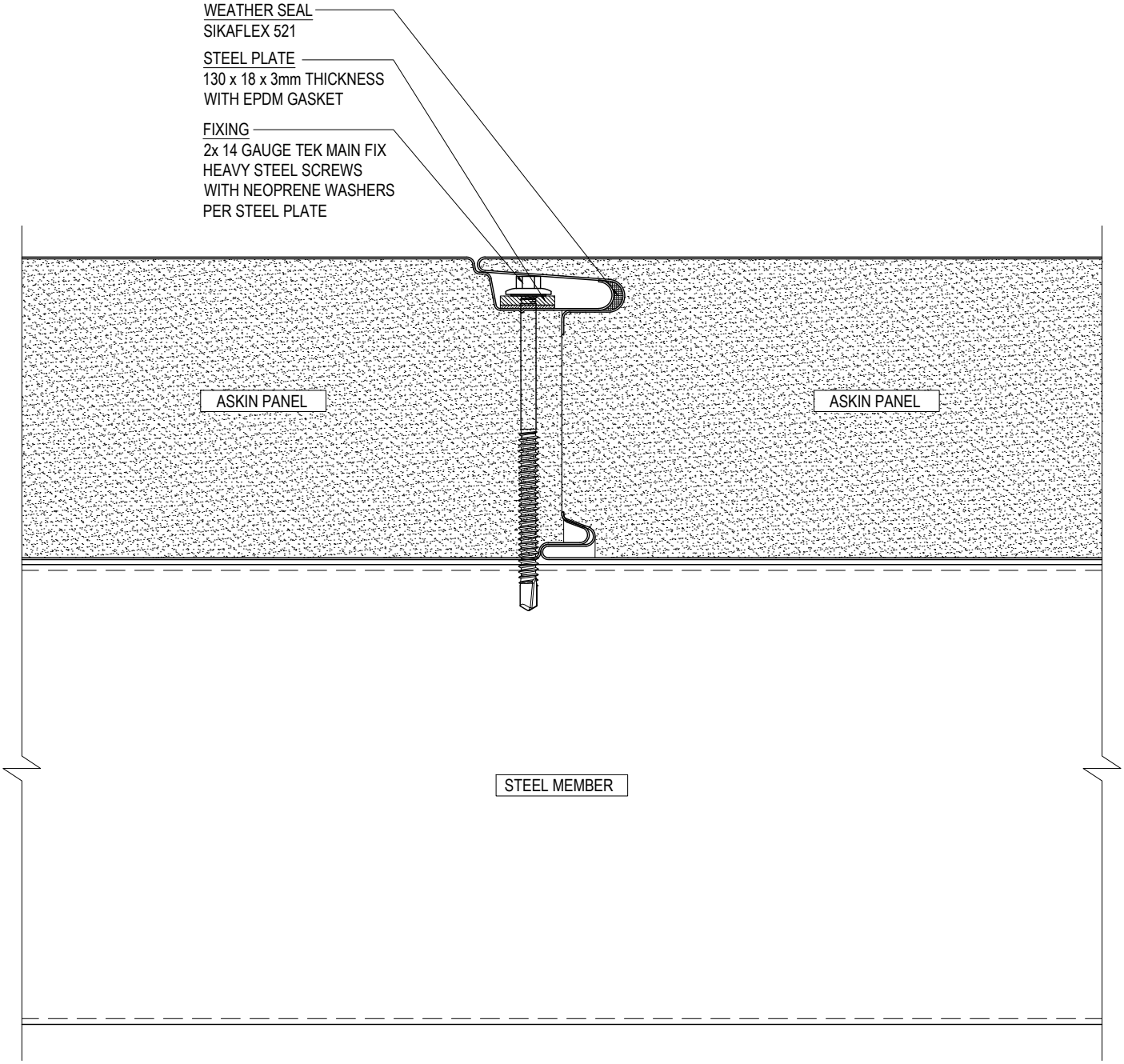

WALL & WALL CONNECTION
DETAIL - PLAN VIEW
SCALE 1:2

ASKIN Performance Panels
www.askin.net.au
VIC P : 03 8769 4816 WA P : 08 9249 4022
SA P : 08 8252 7188 QLD P : 07 3718 9500
NSW P : 02 8825 2598 NT P : 08 8252 7188

PROJECT:
EXTERIORS - VIVID
STANDARD VERTICAL
WALL TO WALL
CONNECTION DETAILS

©ASKIN 2022

Revision		
-	-	-
-	-	-
-	-	-
-	-	-
-	-	-
-	-	-
-	-	-

Checked By: A SHANNON	Scale: 1:2
Drawn By: R VORWERK	Sheet size: A4
Issue date: 09.09.2022	Revision: -
Drawing No.	EXTVIVID - 114

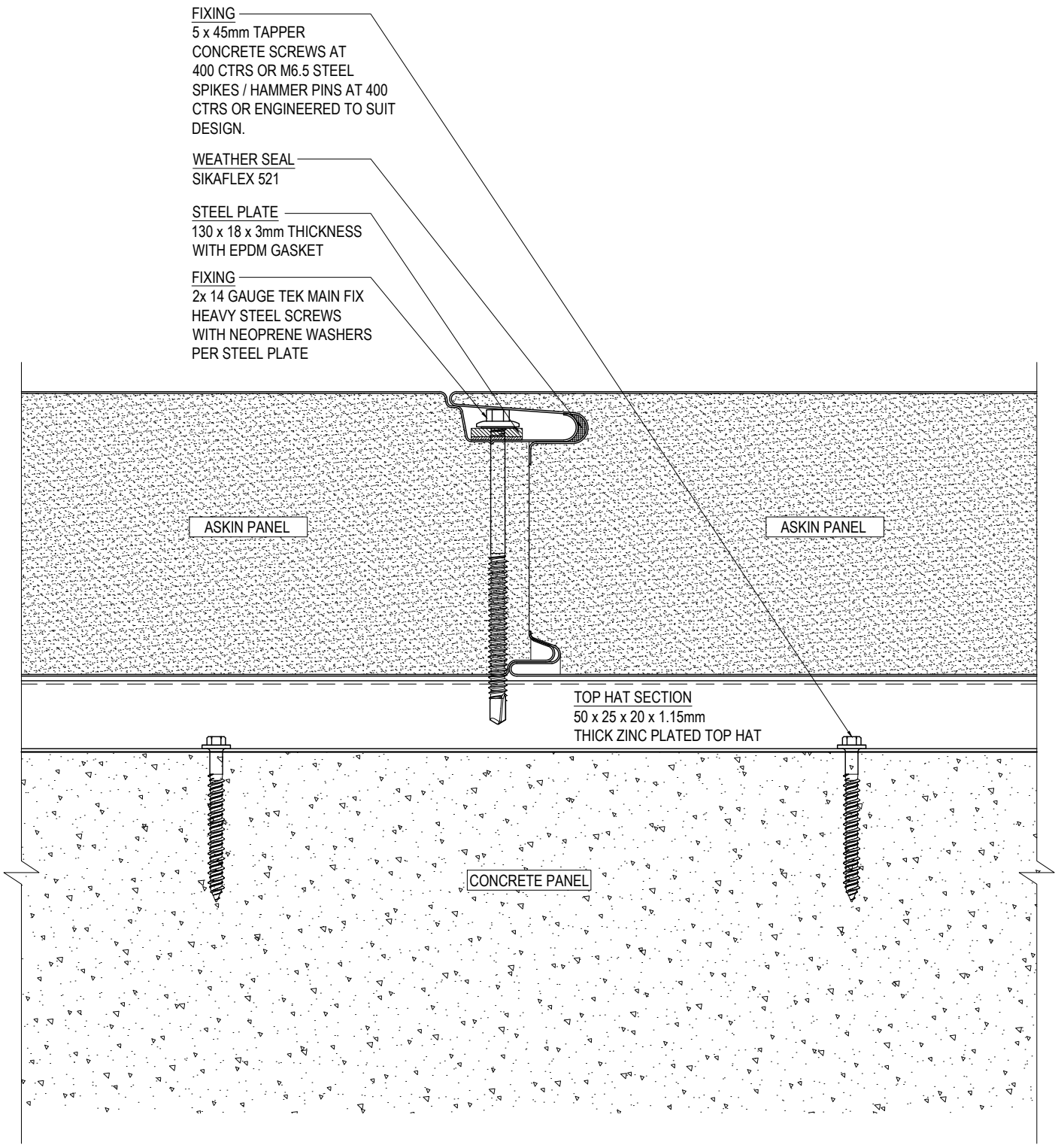

WALL TO WALL CONNECTION
DETAIL - PLAN VIEW
SCALE 1:2

ASKIN Performance Panels

www.askin.net.au
VIC P : 03 8769 4816 WA P : 08 9249 4022
SA P : 08 8252 7188 QLD P : 07 3718 9500
NSW P : 02 8825 2598 NT P : 08 8252 7188

PROJECT:
EXTERIORS - VIVID
STANDARD VERTICAL WALL TO WALL CONNECTION DETAILS

©ASKIN 2022

Revision		
-	-	-
-	-	-
-	-	-
-	-	-
-	-	-
-	-	-
-	-	-

Checked By: A SHANNON	Scale: 1:2
Drawn By: R VORWERK	Sheet size: A4
Issue date: 09.09.2022	Revision: -
Drawing No.	EXTVIVID - 115

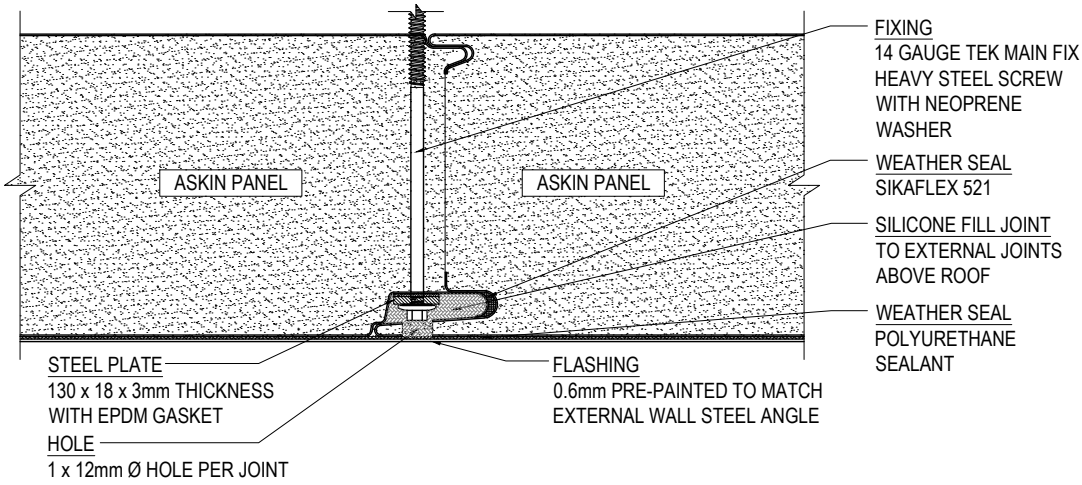

PANEL TO PANEL WITH TEK SCREW & PLATE - PLAN VIEW

SCALE 1:3

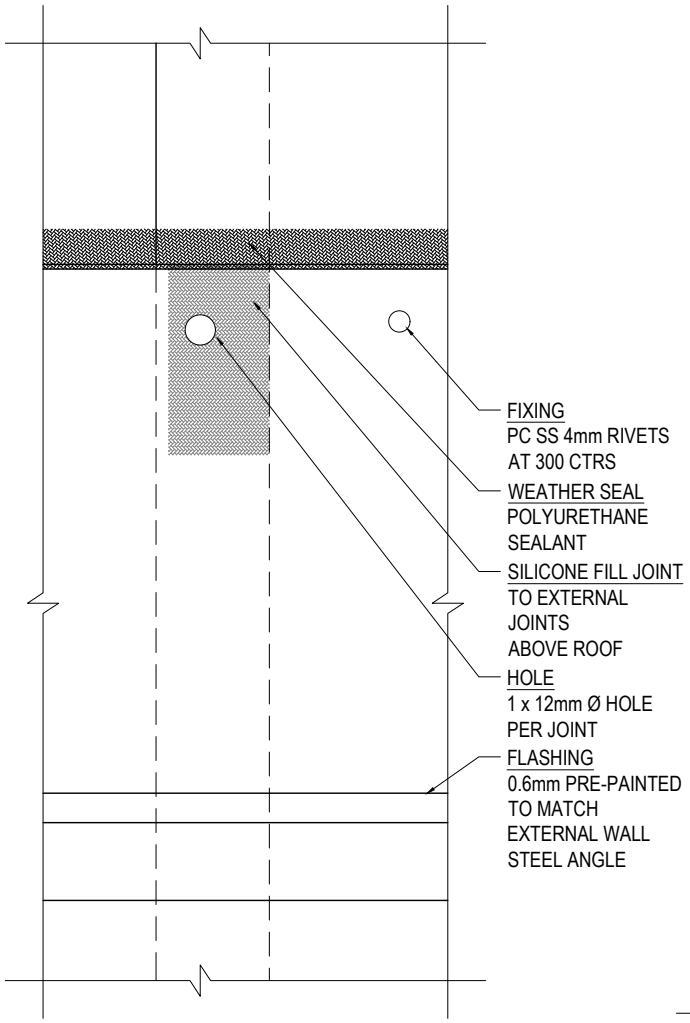

CANOPY ROOF CONNECTION DETAIL - ELEVATION VIEW

SCALE 1:3

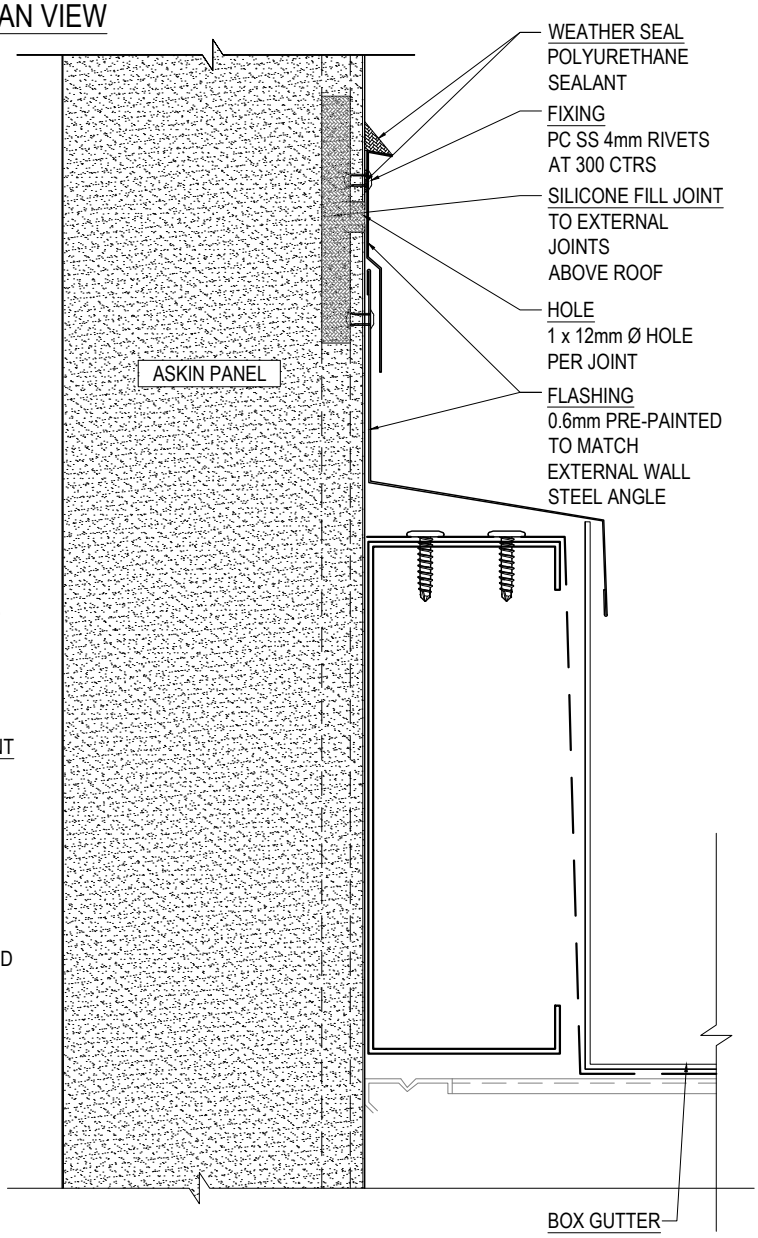

CANOPY ROOF DETAIL - SECTION VIEW

SCALE 1:3

ASKIN Performance Panels

www.askin.net.au

VIC P : 03 8769 4816 WA P : 08 9249 4022
SA P : 08 8252 7188 QLD P : 07 3718 9500
NSW P : 02 8825 2598 NT P : 08 8252 7188

PROJECT:

EXTERIORS - VIVID

STANDARD VERTICAL WALL TO WALL CONNECTION DETAILS

©ASKIN 2022

Revision		
-	-	-
-	-	-
-	-	-
-	-	-
-	-	-
-	-	-
-	-	-

Checked By: A SHANNON	Scale: 1:3
Drawn By: R VORWERK	Sheet size: A4
Issue date: 09.09.2022	Revision: -
Drawing No.	EXTVIVID - 116

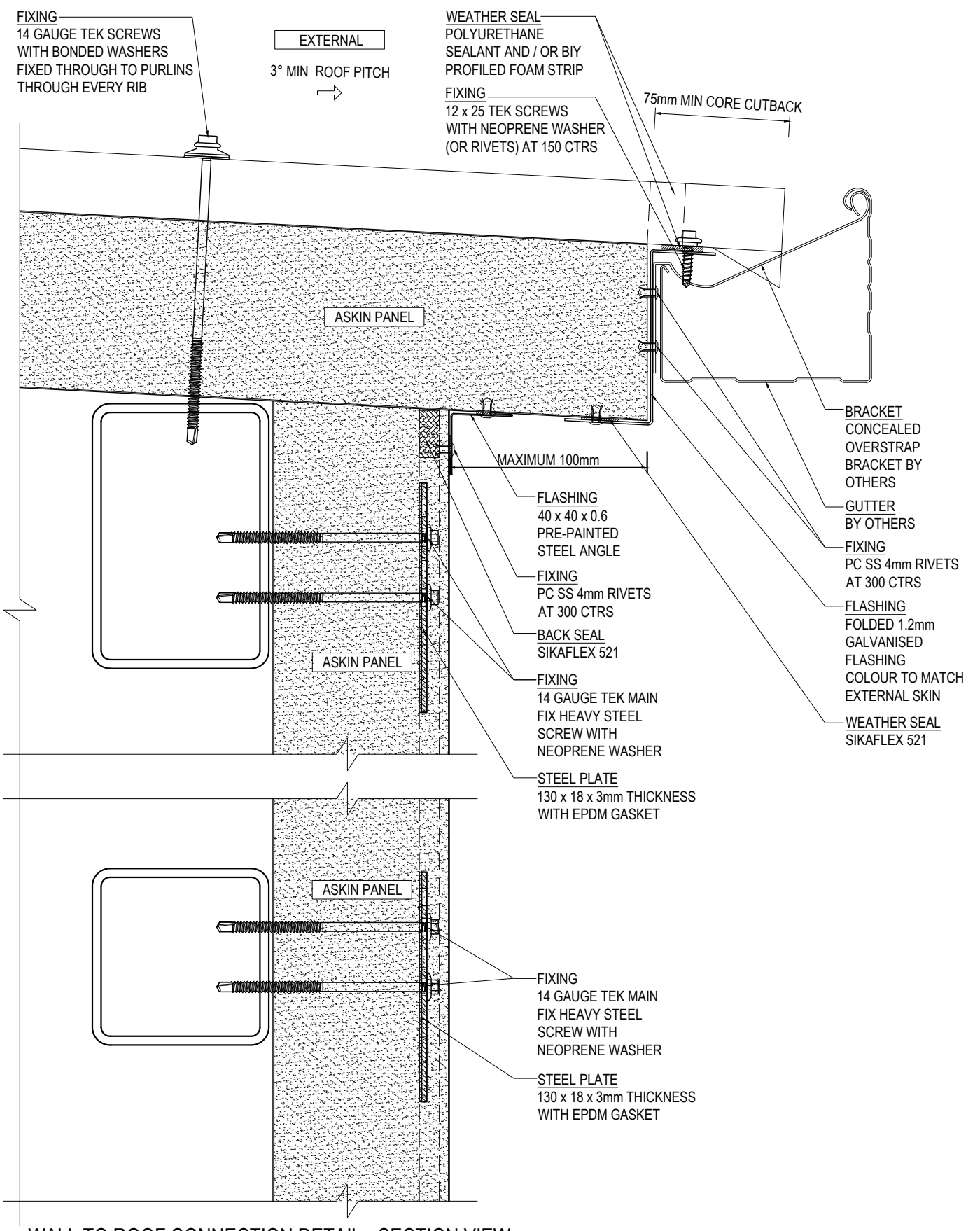

WALL TO ROOF CONNECTION DETAIL - SECTION VIEW

SCALE 1:3

ASKIN Performance Panels
www.askin.net.au
VIC P : 03 8769 4816 WA P : 08 9249 4022
SA P : 08 8252 7188 QLD P : 07 3718 9500
NSW P : 02 8825 2598 NT P : 08 8252 7188

PROJECT:

EXTERIORS - VIVID

STANDARD VERTICAL ROOFING AND PARAPET CONNECTION DETAILS

©ASKIN 2022

Revision		
-	-	-
-	-	-
-	-	-
-	-	-
-	-	-
-	-	-
-	-	-

Checked By: A SHANNON	Scale: 1:3
Drawn By: R VORWERK	Sheet size: A4
Issue date: 09.09.2022	Revision: -
Drawing No.	EXTVIVID - 120

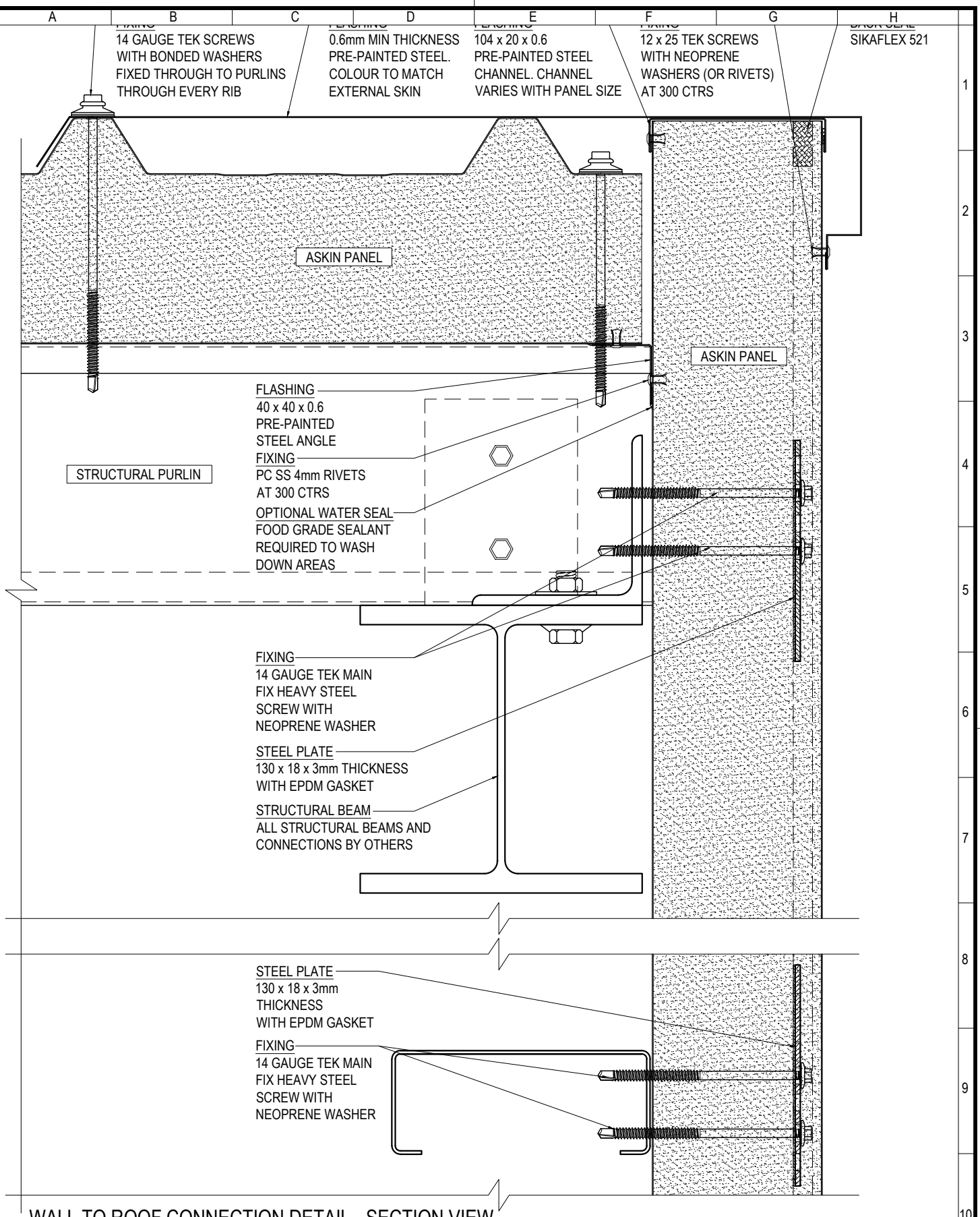

WALL TO ROOF CONNECTION DETAIL - SECTION VIEW

SCALE 1:3

ASKIN Performance Panels

www.askin.net.au

VIC P : 03 8769 4816 WA P : 08 9249 4022
SA P : 08 8252 7188 QLD P : 07 3718 9500
NSW P : 02 8825 2598 NT P : 08 8252 7188

PROJECT:

EXTERIORS - VIVID

STANDARD VERTICAL ROOFING AND PARAPET CONNECTION DETAILS

©ASKIN 2022

Revision		
-	-	-
-	-	-
-	-	-
-	-	-
-	-	-
-	-	-
-	-	-

Checked By: A SHANNON	Scale: 1:3
Drawn By: R VORWERK	Sheet size: A4
Issue date: 09.09.2022	Revision: -
Drawing No.	EXTVIVID - 121

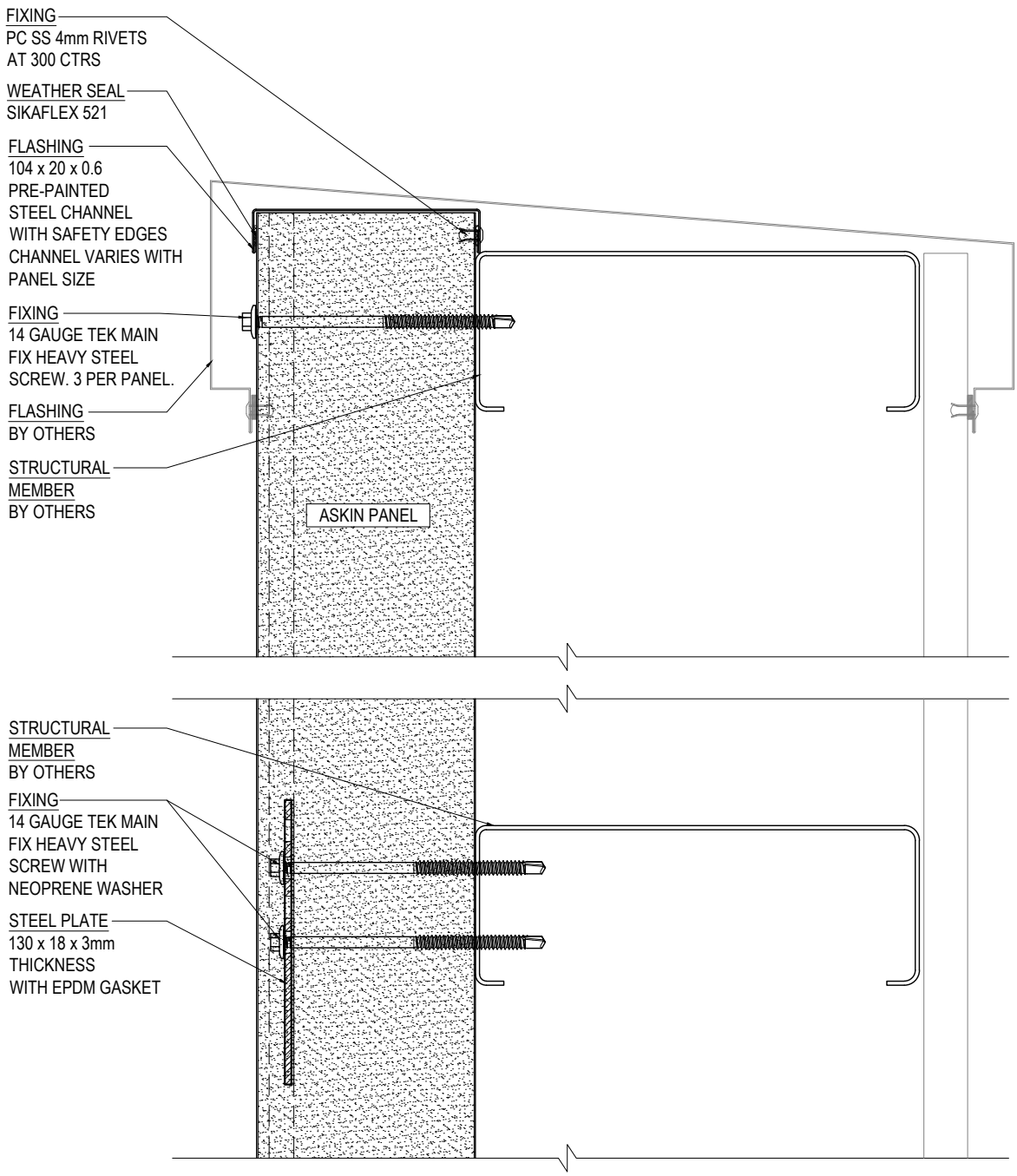

WALL TO PARAPET CONNECTION DETAIL - SECTION VIEW

SCALE 1:3

ASKIN Performance Panels
www.askin.net.au
VIC P : 03 8769 4816 WA P : 08 9249 4022
SA P : 08 8252 7188 QLD P : 07 3718 9500
NSW P : 02 8825 2598 NT P : 08 8252 7188

PROJECT:

EXTERIORS - VIVID

STANDARD VERTICAL ROOFING AND PARAPET CONNECTION DETAILS

©ASKIN 2022

Revision		
-	-	-
-	-	-
-	-	-
-	-	-
-	-	-
-	-	-
-	-	-

Checked By: A SHANNON	Scale: 1:3
Drawn By: R VORWERK	Sheet size: A4
Issue date: 09.09.2022	Revision: -
Drawing No.	EXTVIVID - 122

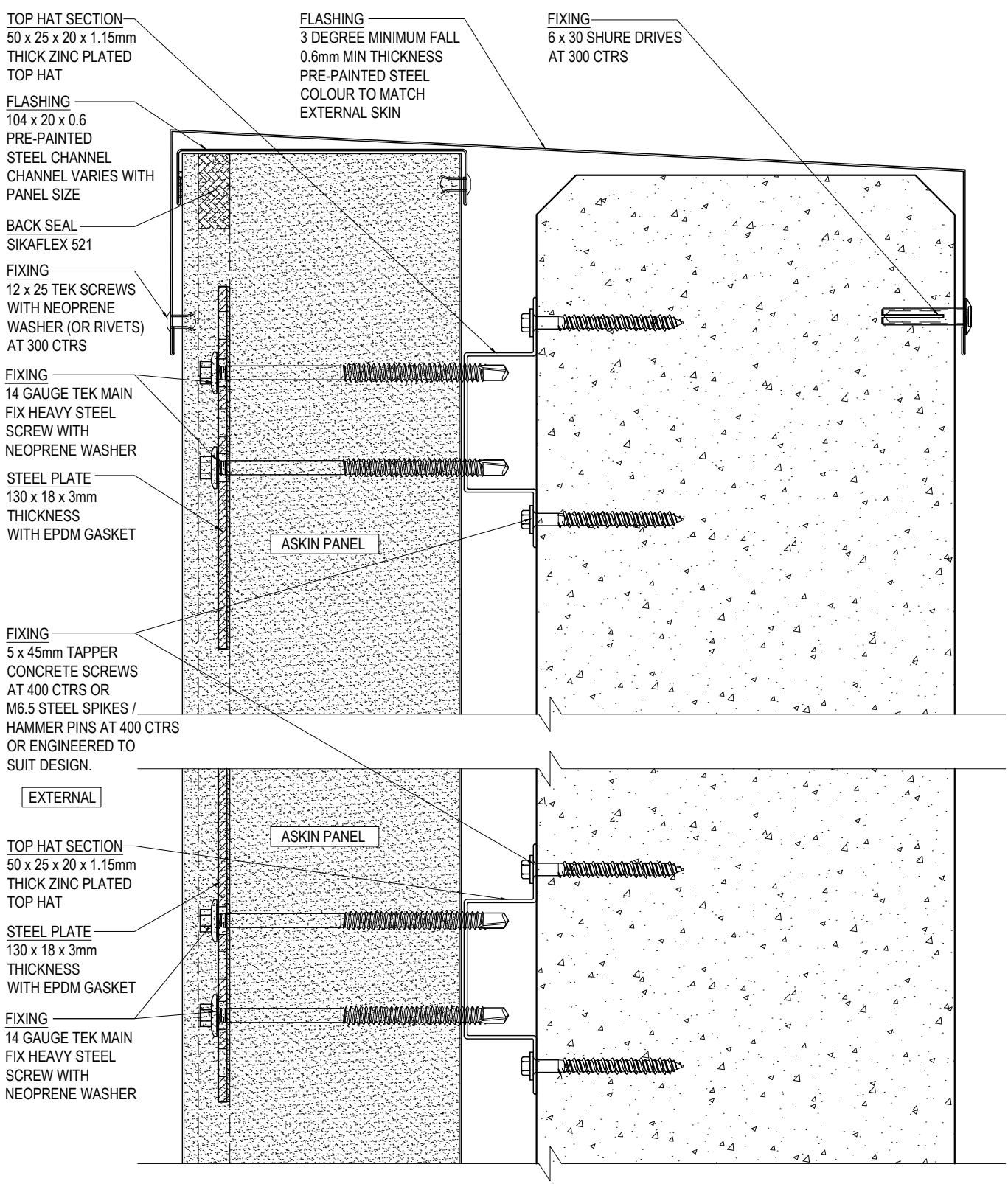

WALL TO ROOF CONNECTION DETAIL - SECTION VIEW

SCALE 1:2

ASKIN Performance Panels

www.askin.net.au

VIC P : 03 8769 4816 WA P : 08 9249 4022
SA P : 08 8252 7188 QLD P : 07 3718 9500
NSW P : 02 8825 2598 NT P : 08 8252 7188

PROJECT:

EXTERIORS - VIVID

STANDARD VERTICAL ROOFING AND PARAPET CONNECTION DETAILS

©ASKIN 2022

Revision		
-	-	-
-	-	-
-	-	-
-	-	-
-	-	-
-	-	-
-	-	-

Checked By: A SHANNON	Scale: 1:2
Drawn By: R VORWERK	Sheet size: A4
Issue date: 09.09.2022	Revision: -
Drawing No.	EXTVIVID - 123

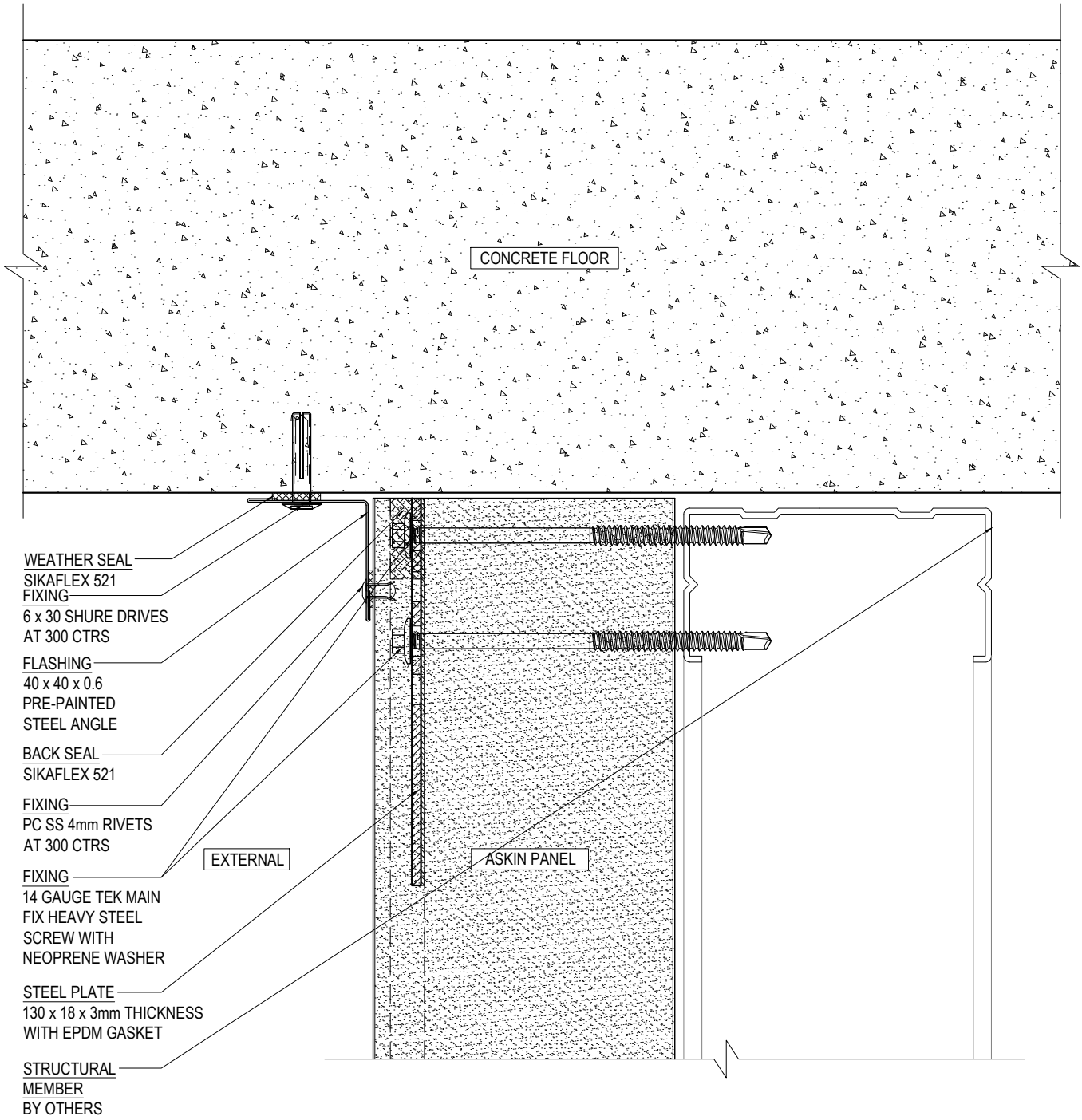

WALL TO CONCRETE SLAB CONNECTION DETAIL - SECTION VIEW

SCALE 1:2

ASKIN Performance Panels
www.askin.net.au
VIC P : 03 8769 4816 WA P : 08 9249 4022
SA P : 08 8252 7188 QLD P : 07 3718 9500
NSW P : 02 8825 2598 NT P : 08 8252 7188

PROJECT:

EXTERIORS - VIVID

STANDARD VERTICAL ROOFING AND PARAPET CONNECTION DETAILS

©ASKIN 2022

Revision

-	-	-
-	-	-
-	-	-
-	-	-
-	-	-
-	-	-
-	-	-

Checked By: A SHANNON	Scale: 1:2
Drawn By: R VORWERK	Sheet size: A4
Issue date: 09.09.2022	Revision: -
Drawing No.	EXTVIVID - 124

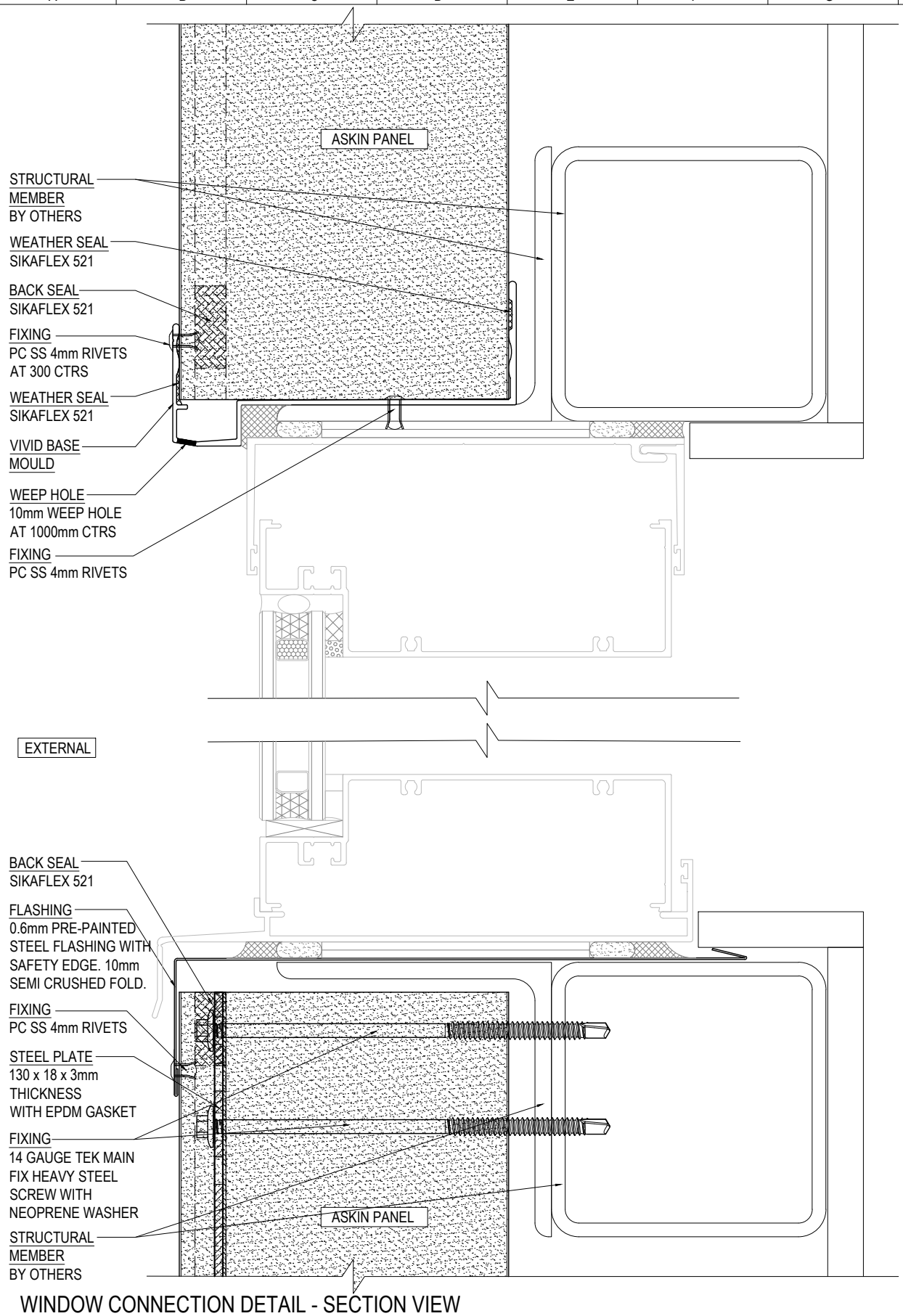

WINDOW CONNECTION DETAIL - SECTION VIEW

SCALE 1:2

ASKIN Performance Panels
www.askin.net.au
VIC P : 03 8769 4816 WA P : 08 9249 4022
SA P : 08 8252 7188 QLD P : 07 3718 9500
NSW P : 02 8825 2598 NT P : 08 8252 7188

PROJECT:

EXTERIORS - VIVID

STANDARD VERTICAL WINDOW CONNECTION DETAILS

©ASKIN 2022

Revision		
-	-	-
-	-	-
-	-	-
-	-	-
-	-	-
-	-	-
-	-	-

Checked By: A SHANNON	Scale: 1:2
Drawn By: R VORWERK	Sheet size: A4
Issue date: 09.09.2022	Revision: -
Drawing No.	EXTVIVID - 130

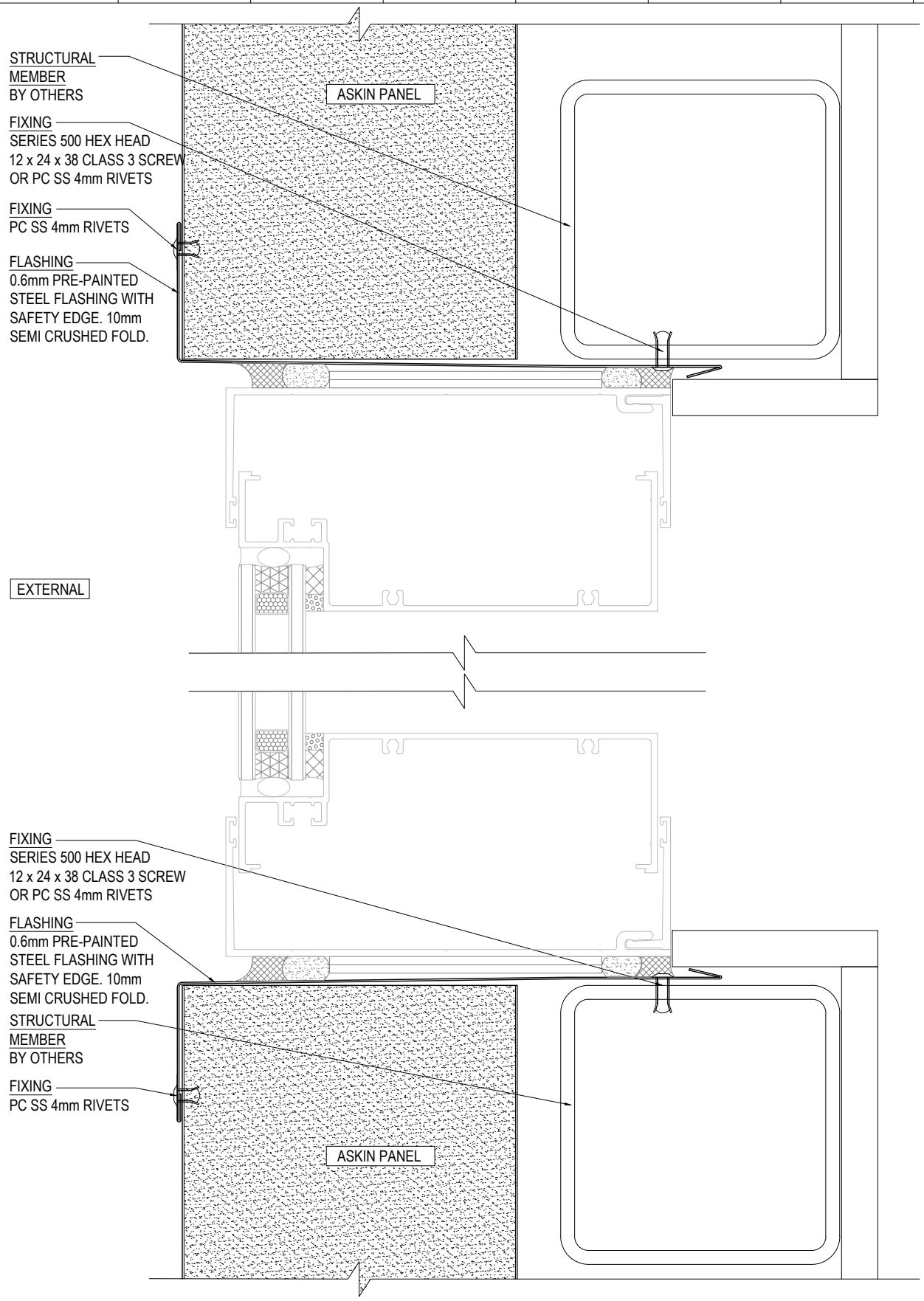

WINDOW CONNECTION DETAIL - PLAN VIEW

SCALE 1:2

ASKIN Performance Panels

www.askin.net.au

VIC P : 03 8769 4816 WA P : 08 9249 4022
SA P : 08 8252 7188 QLD P : 07 3718 9500
NSW P : 02 8825 2598 NT P : 08 8252 7188

PROJECT:

EXTERIORS - VIVID

STANDARD VERTICAL WINDOW CONNECTION DETAILS

©ASKIN 2022

Revision

-	-	-
-	-	-
-	-	-
-	-	-
-	-	-
-	-	-
-	-	-

Checked By: A SHANNON	Scale: 1:2
Drawn By: R VORWERK	Sheet size: A4
Issue date: 09.09.2022	Revision: -
Drawing No.	EXTVIVID - 131

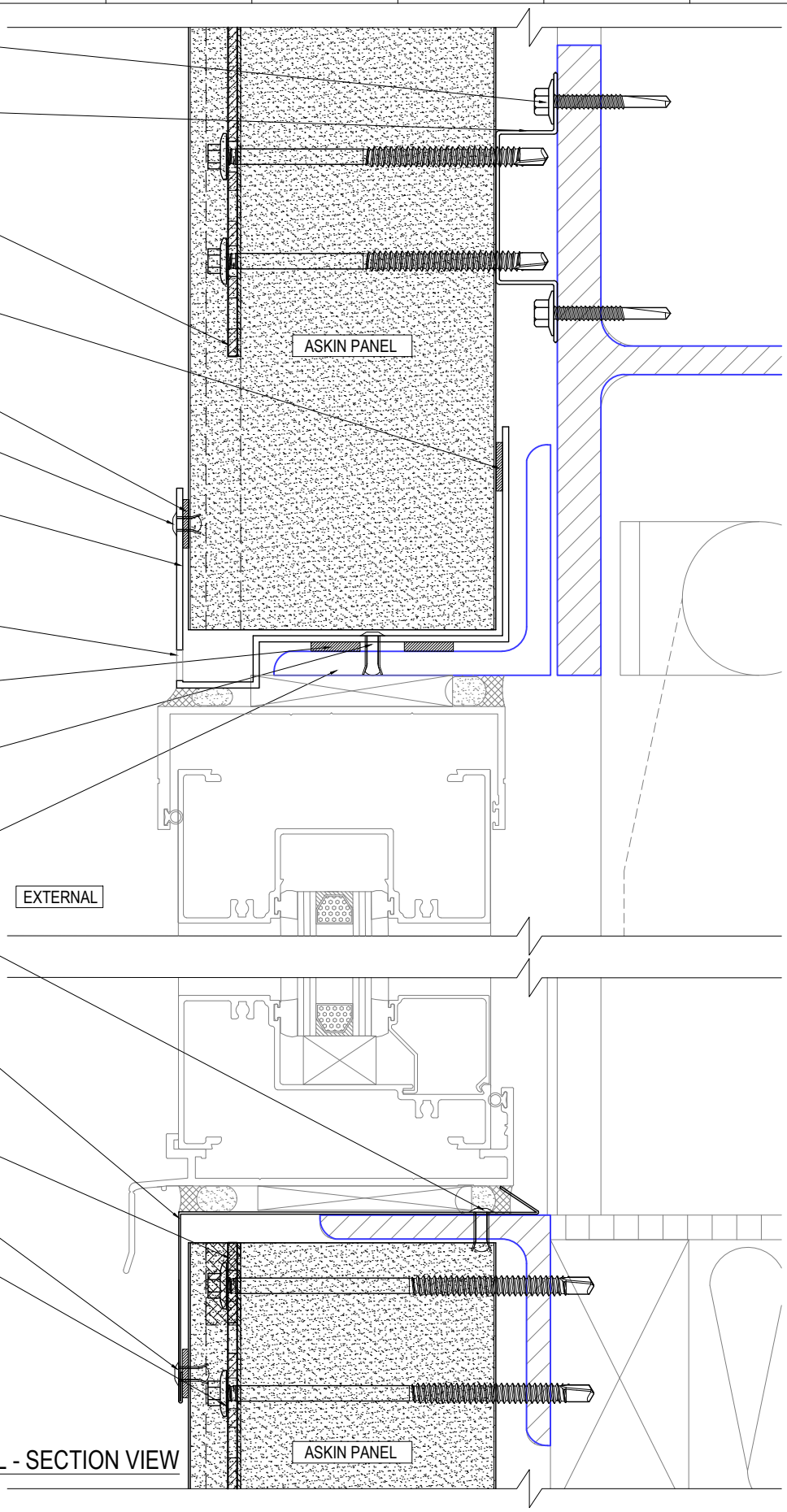

WINDOW CONNECTION DETAIL - SECTION VIEW

SCALE 1:2

ASKIN Performance Panels
www.askin.net.au
VIC P : 03 8769 4816 WA P : 08 9249 4022
SA P : 08 8252 7188 QLD P : 07 3718 9500
NSW P : 02 8825 2598 NT P : 08 8252 7188

PROJECT:

EXTERIORS - VIVID

STANDARD VERTICAL WINDOW CONNECTION DETAILS

©ASKIN 2022

Revision		
-	-	-
-	-	-
-	-	-
-	-	-
-	-	-
-	-	-
-	-	-

Checked By: A SHANNON	Scale: 1:2
Drawn By: R VORWERK	Sheet size: A4
Issue date: 09.09.2022	Revision: -
Drawing No.	EXTVIVID - 132

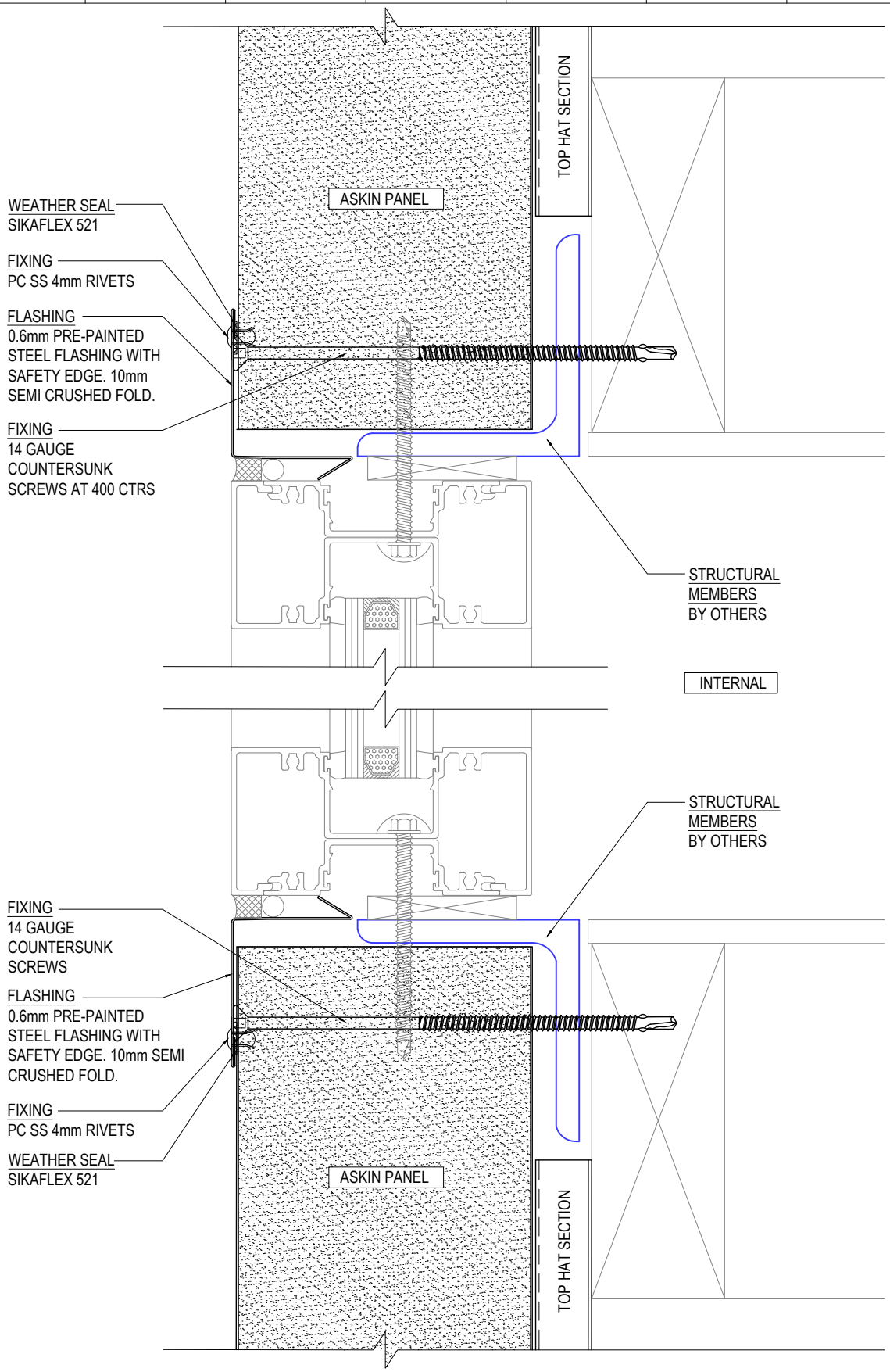

WINDOW CONNECTION DETAIL - PLAN VIEW

SCALE 1:2

ASKIN Performance Panels

www.askin.net.au

VIC P : 03 8769 4816 WA P : 08 9249 4022
SA P : 08 8252 7188 QLD P : 07 3718 9500
NSW P : 02 8825 2598 NT P : 08 8252 7188

PROJECT:

EXTERIORS - VIVID

STANDARD VERTICAL WINDOW CONNECTION DETAILS

©ASKIN 2022

Revision

-	-	-
-	-	-
-	-	-
-	-	-
-	-	-
-	-	-
-	-	-

Checked By: A SHANNON	Scale: 1:2
Drawn By: R VORWERK	Sheet size: A4
Issue date: 09.09.2022	Revision: -
Drawing No.	EXTVIVID - 133

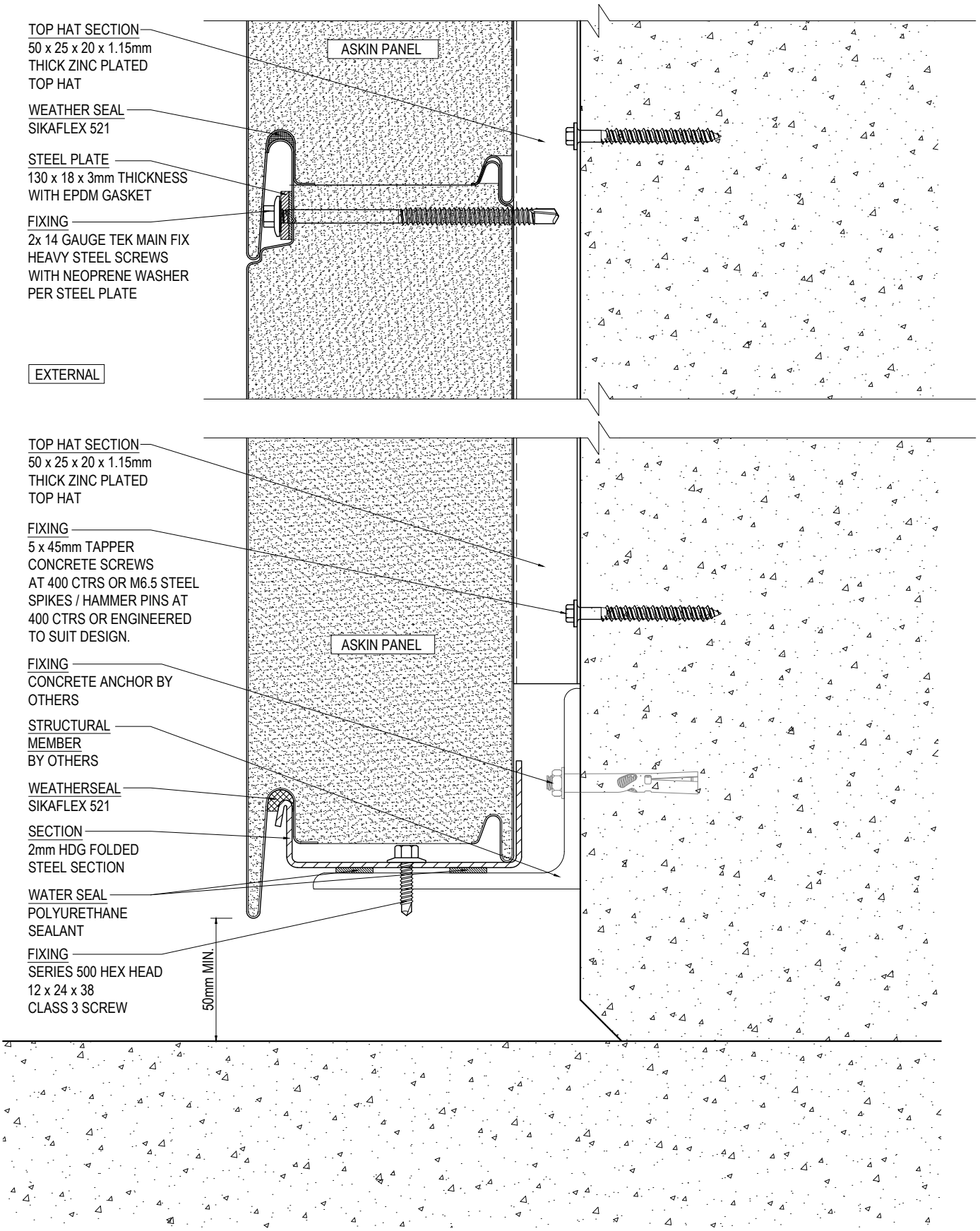

WALL TO CONCRETE WALL CONNECTION DETAIL - SECTION VIEW

SCALE 1:2

ASKIN Performance Panels

www.askin.net.au

VIC P : 03 8769 4816 WA P : 08 9249 4022
SA P : 08 8252 7188 QLD P : 07 3718 9500
NSW P : 02 8825 2598 NT P : 08 8252 7188

PROJECT:

EXTERIORS - VIVID

STANDARD HORIZONTAL
WALL TO FLOOR
CONNECTION DETAIL

©ASKIN 2022

Revision		
-	-	-
-	-	-
-	-	-
-	-	-
-	-	-
-	-	-
-	-	-

Checked By: A SHANNON	Scale: 1:2
Drawn By: R VORWERK	Sheet size: A4
Issue date: 09.09.2022	Revision: -
Drawing No.	EXTVIVID - 200

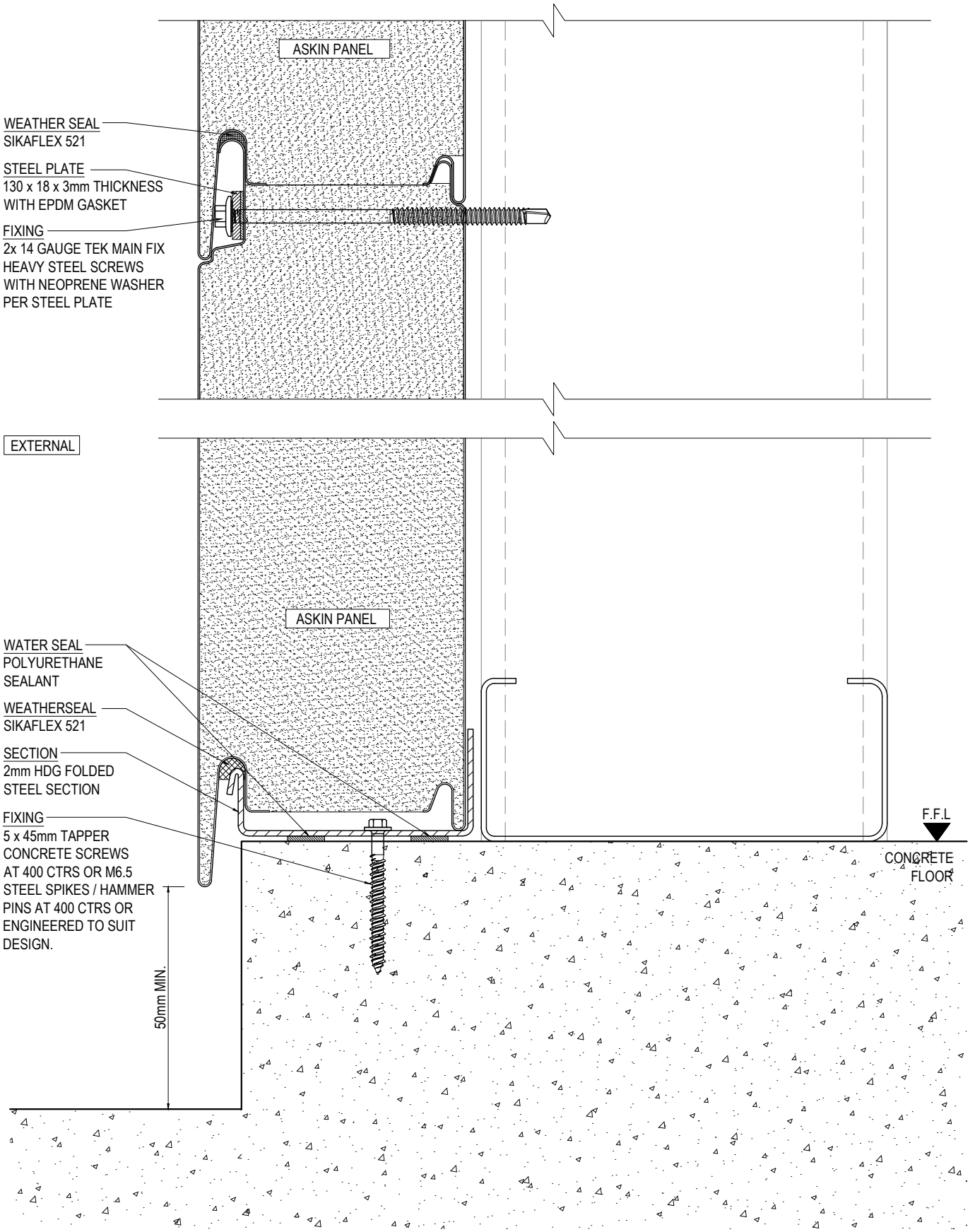

WALL TO STRUCTURAL FRAME CONNECTION DETAIL - SECTION VIEW

SCALE 1:2

ASKIN Performance Panels

www.askin.net.au

VIC	P : 03 8769 4816	WA	P : 08 9249 4022
SA	P : 08 8252 7188	QLD	P : 07 3718 9500
NSW	P : 02 8825 2598	NT	P : 08 8252 7188

PROJECT:

EXTERIORS - VIVID

STANDARD HORIZONTAL WALL TO FLOOR CONNECTION DETAIL

©ASKIN 2022

Revision

-	-	-
-	-	-
-	-	-
-	-	-
-	-	-
-	-	-
-	-	-

Checked By: A SHANNON	Scale: 1:2
Drawn By: R VORWERK	Sheet size: A4
Issue date: 09.09.2022	Revision: -
Drawing No.	EXTVIVID - 201

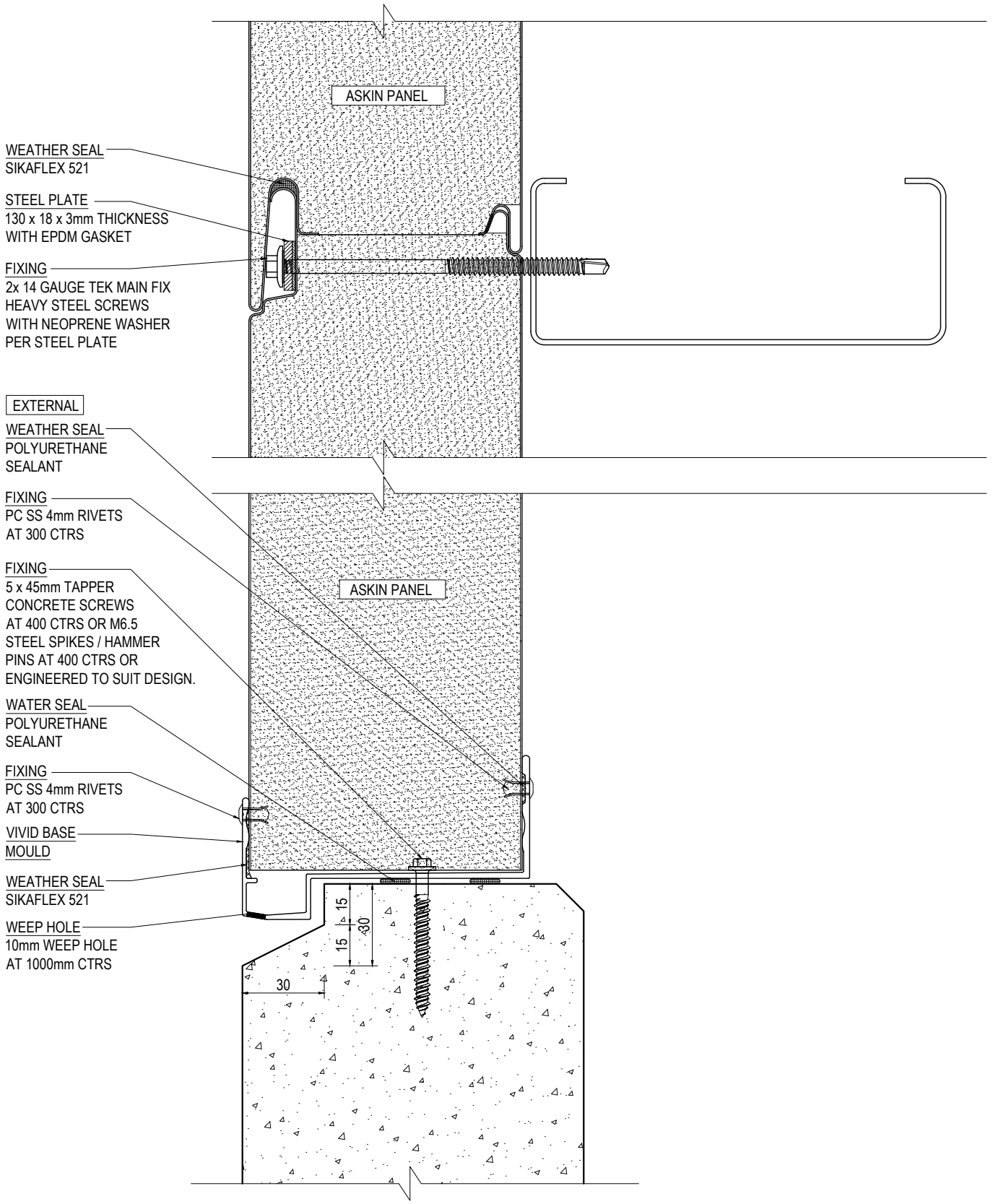

WALL TO CONCRETE PLINTH CONNECTION DETAIL - SECTION VIEW

SCALE 1:2

ASKIN Performance Panels

www.askin.net.au

VIC P : 03 8769 4816 WA P : 08 9249 4022
SA P : 08 8252 7188 QLD P : 07 3718 9500
NSW P : 02 8825 2598 NT P : 08 8252 7188

PROJECT:

EXTERIORS - VIVID

STANDARD HORIZONTAL WALL TO FLOOR CONNECTION DETAIL

©ASKIN 2022

Revision		
-	-	-
-	-	-
-	-	-
-	-	-
-	-	-
-	-	-
-	-	-

Checked By: A SHANNON	Scale: 1:2
Drawn By: R VORWERK	Sheet size: A4
Issue date: 09.09.2022	Revision: -
Drawing No.	EXTVIVID - 202

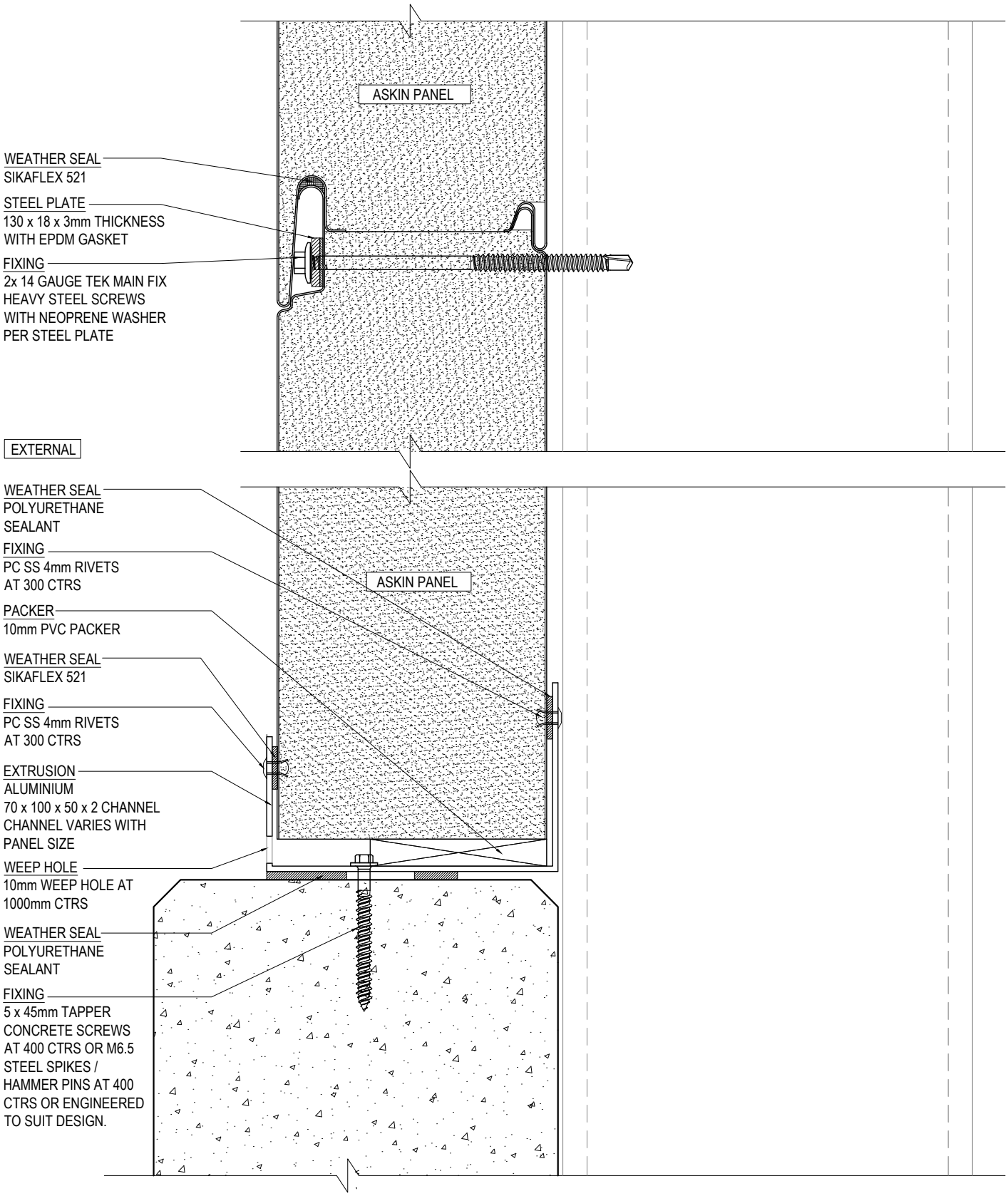

WALL TO CONCRETE PLINTH CONNECTION DETAIL - SECTION VIEW

SCALE 1:2

ASKIN Performance Panels
www.askin.net.au
VIC P : 03 8769 4816 WA P : 08 9249 4022
SA P : 08 8252 7188 QLD P : 07 3718 9500
NSW P : 02 8825 2598 NT P : 08 8252 7188

PROJECT:

EXTERIORS - VIVID

STANDARD HORIZONTAL
WALL TO FLOOR
CONNECTION DETAIL

©ASKIN 2022

Revision		
-	-	-
-	-	-
-	-	-
-	-	-
-	-	-
-	-	-
-	-	-

Checked By: A SHANNON	Scale: 1:2
Drawn By: R VORWERK	Sheet size: A4
Issue date: 09.09.2022	Revision: -
Drawing No.	EXTVIVID - 203

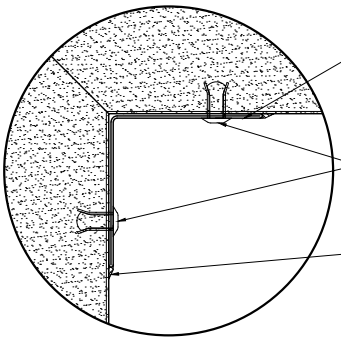

FLASHING
40 x 40 x 0.6
PRE-PAINTED
STEEL ANGLE

FIXING
PC SS 4mm RIVETS
AT 300 CTRS

OPTIONAL WATER SEAL
FOOD GRADE SEALANT
REQUIRED TO WASH
DOWN AREAS

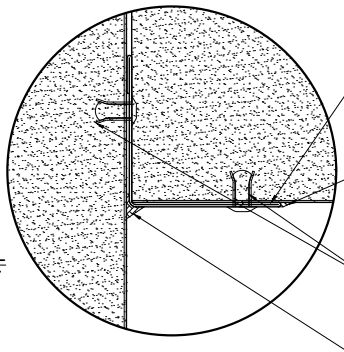

FLASHING
40 x 40 x 0.6
PRE-PAINTED
STEEL ANGLE

WATER SEAL
FOOD GRADE SEALANT
REQUIRED TO WASH
DOWN AREAS

FIXING
PC SS 4mm RIVETS
AT 300 CTRS

OPTIONAL WATER SEAL
FOOD GRADE SEALANT
REQUIRED TO WASH
DOWN AREAS

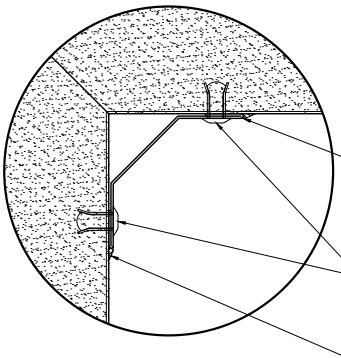

FLASHING
35 x 35 x 0.6
PRE-PAINTED STEEL
COVE ANGLE

FIXING
PC SS 4mm RIVETS
AT 300 CTRS

OPTIONAL WATER SEAL
FOOD GRADE SEALANT
REQUIRED TO WASH
DOWN AREAS

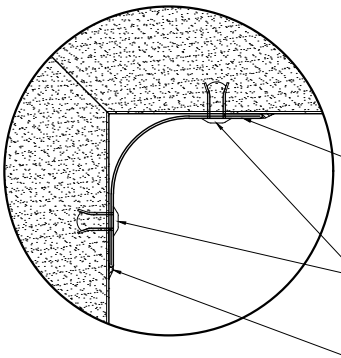

FLASHING
40 x 40 x 0.6
PRE-PAINTED
STEEL RADIUS

FIXING
PC SS 4mm RIVETS
AT 300 CTRS

OPTIONAL WATER SEAL
FOOD GRADE SEALANT
REQUIRED TO WASH
DOWN AREAS

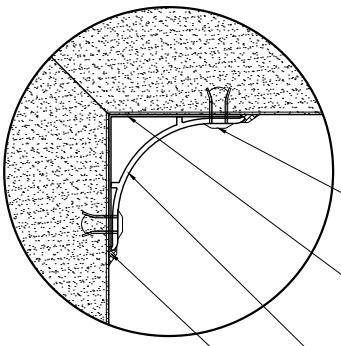

FIXING
PC SS 4mm RIVETS
AT 300 CTRS

FLASHING
35 x 35 x 0.6
PRE-PAINTED
STEEL ANGLE

EXTRUSION
35mm POWDER COATED
ALUMINIUM RADIUS

OPTIONAL WATER SEAL
FOOD GRADE SEALANT
REQUIRED TO WASH
DOWN AREAS

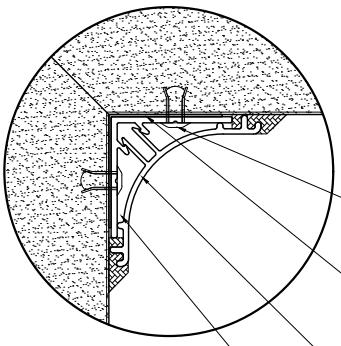

FIXING
PC SS 4mm RIVETS
AT 300 CTRS

FLASHING
30 x 30 x 0.6
PRE-PAINTED
STEEL ANGLE

EXTRUSION
POWDERCOATED
ALUMINIUM 2 PART
HIDDEN FIX RADIUS

OPTIONAL WATER SEAL
FOOD GRADE SEALANT
REQUIRED TO WASH
DOWN AREAS

ALTERNATIVE INTERNAL CORNICES - PLAN VIEW

SCALE 1:2

ASKIN Performance Panels

www.askin.net.au

VIC P : 03 8769 4816 WA P : 08 9249 4022
SA P : 08 8252 7188 QLD P : 07 3718 9500
NSW P : 02 8825 2598 NT P : 08 8252 7188

PROJECT:

EXTERIORS - VIVID

STANDARD HORIZONTAL WALL TO WALL CONNECTION DETAILS

©ASKIN 2022

Revision		
-	-	-
-	-	-
-	-	-
-	-	-
-	-	-
-	-	-
-	-	-

Checked By: A SHANNON	Scale: 1:2
Drawn By: R VORWERK	Sheet size: A4
Issue date: 09.09.2022	Revision: -
Drawing No.	EXTVIVID - 210

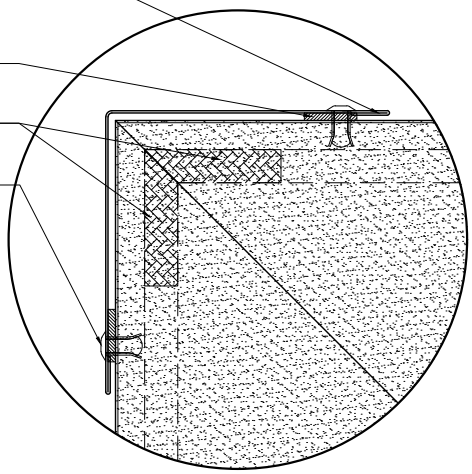

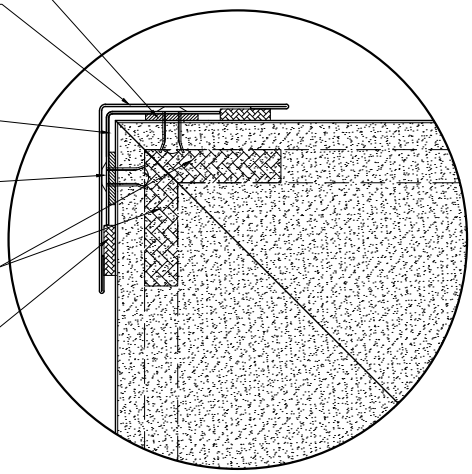

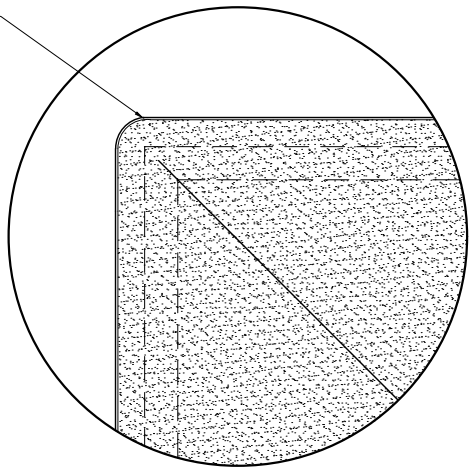

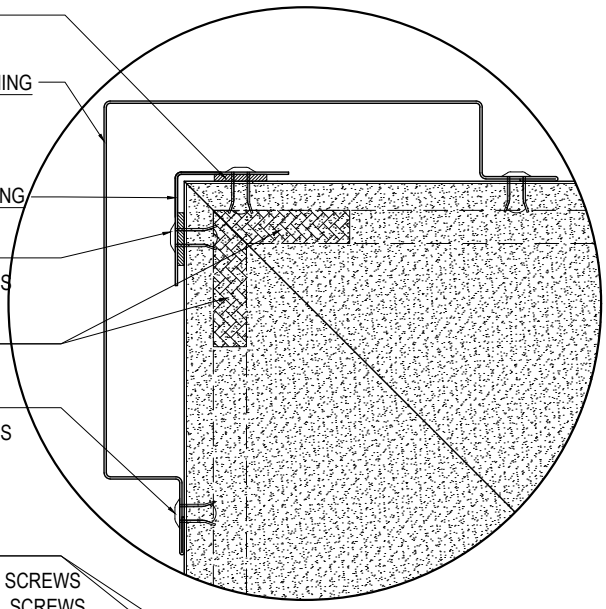

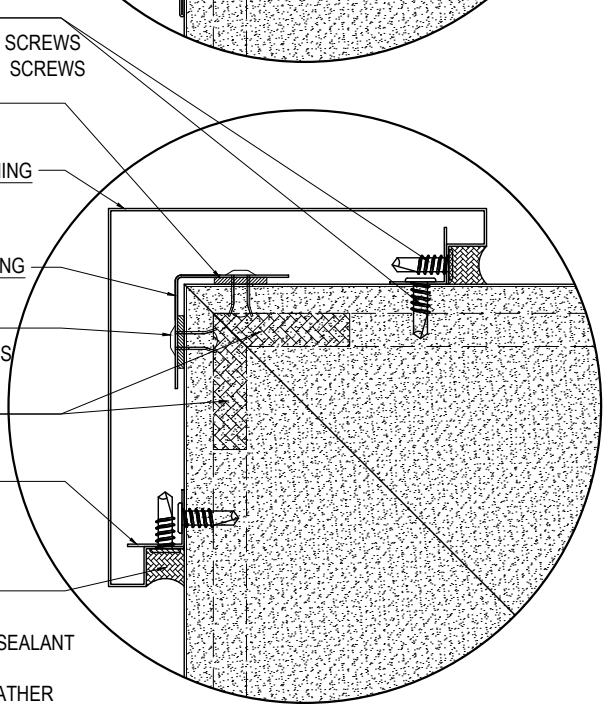

ALTERNATIVE EXTERNAL CORNER DETAILS - PLAN VIEW

SCALE 1:2

ASKIN Performance Panels
www.askin.net.au
VIC P : 03 8769 4816 WA P : 08 9249 4022
SA P : 08 8252 7188 QLD P : 07 3718 9500
NSW P : 02 8825 2598 NT P : 08 8252 7188

PROJECT:

EXTERIORS - VIVID

STANDARD HORIZONTAL WALL TO WALL CONNECTION DETAILS

©ASKIN 2022

Revision		
-	-	-
-	-	-
-	-	-
-	-	-
-	-	-
-	-	-
-	-	-

Checked By: A SHANNON	Scale: 1:2
Drawn By: R VORWERK	Sheet size: A4
Issue date: 09.09.2022	Revision: -
Drawing No.	EXTVIVID - 211

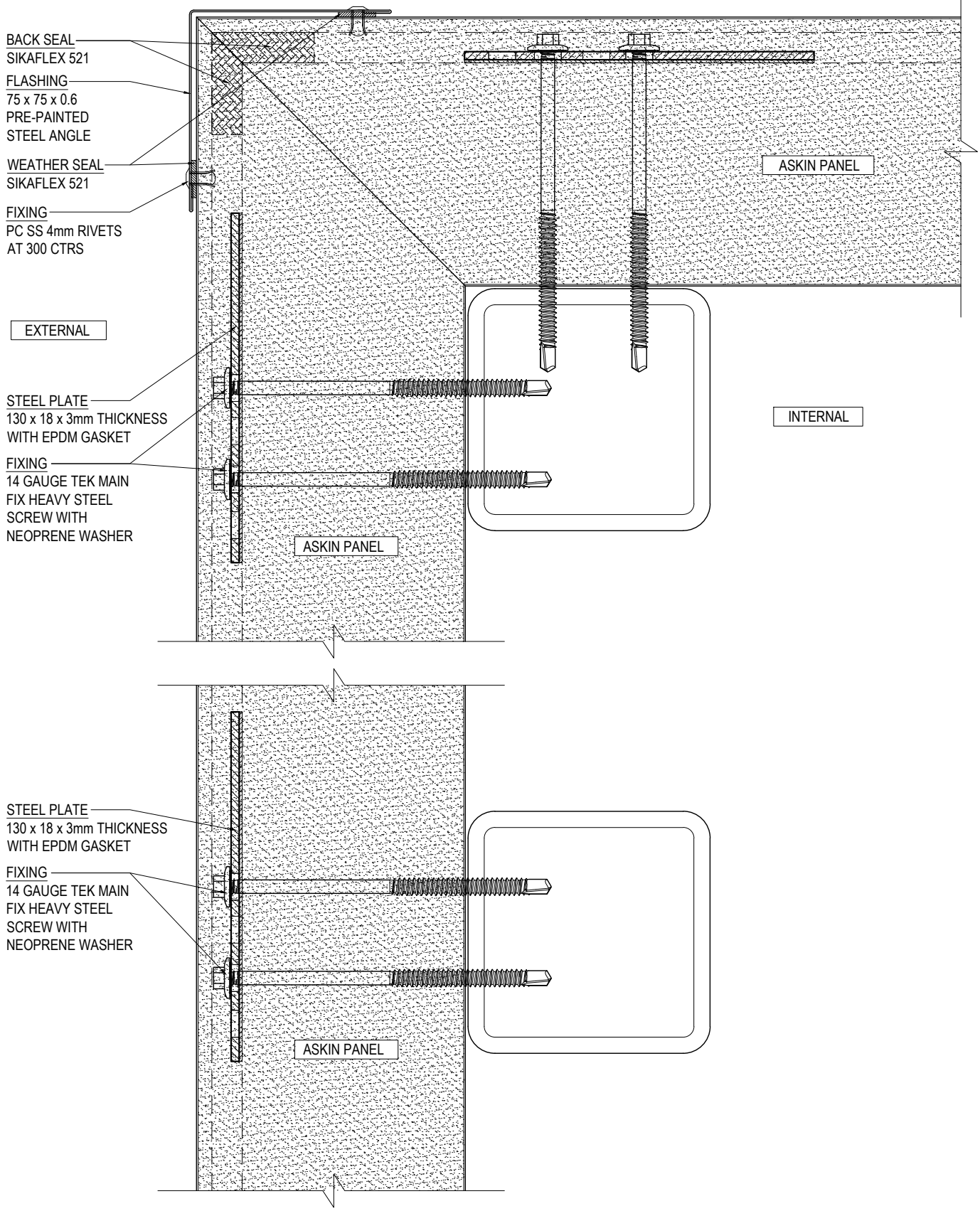

WALL TO WALL CONNECTION DETAIL - PLAN VIEW

SCALE 1:2

ASKIN Performance Panels
www.askin.net.au
VIC P : 03 8769 4816 WA P : 08 9249 4022
SA P : 08 8252 7188 QLD P : 07 3718 9500
NSW P : 02 8825 2598 NT P : 08 8252 7188

PROJECT:

EXTERIORS - VIVID

STANDARD HORIZONTAL WALL TO WALL CONNECTION DETAILS

©ASKIN 2022

Revision		
-	-	-
-	-	-
-	-	-
-	-	-
-	-	-
-	-	-
-	-	-

Checked By: A SHANNON	Scale: 1:2
Drawn By: R VORWERK	Sheet size: A4
Issue date: 09.09.2022	Revision: -
Drawing No.	EXTVIVID - 212

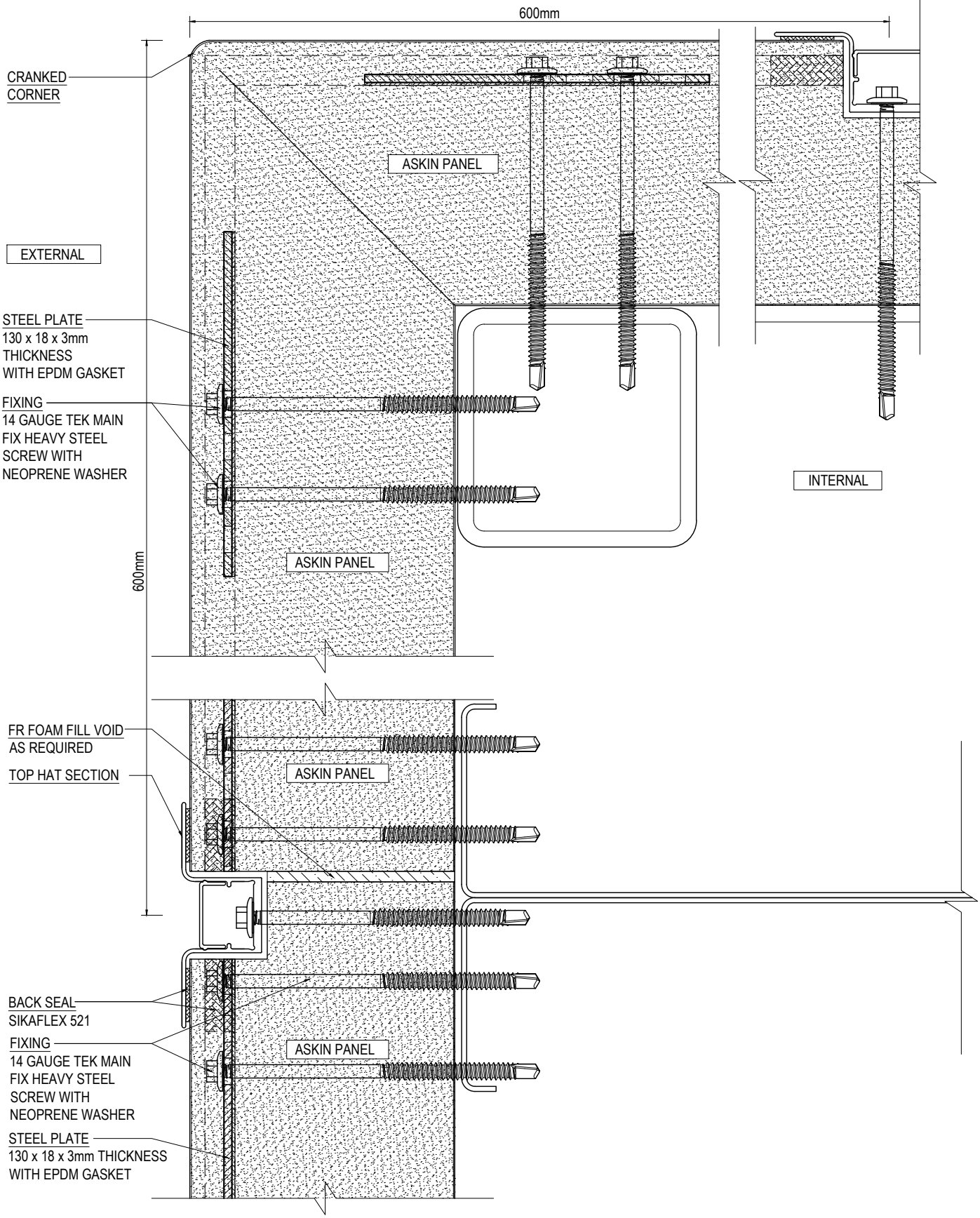

WALL TO WALL CONNECTION
DETAIL - PLAN VIEW
SCALE 1:2

ASKIN Performance Panels
www.askin.net.au
VIC P : 03 8769 4816 WA P : 08 9249 4022
SA P : 08 8252 7188 QLD P : 07 3718 9500
NSW P : 02 8825 2598 NT P : 08 8252 7188

PROJECT:
EXTERIORS - VIVID
STANDARD HORIZONTAL
WALL TO WALL
CONNECTION DETAILS

©ASKIN 2022

Revision

-	-	-
-	-	-
-	-	-
-	-	-
-	-	-
-	-	-
-	-	-

Checked By: A SHANNON	Scale: 1:2
Drawn By: R VORWERK	Sheet size: A4
Issue date: 09.09.2022	Revision: -
Drawing No.	EXTVIVID - 213

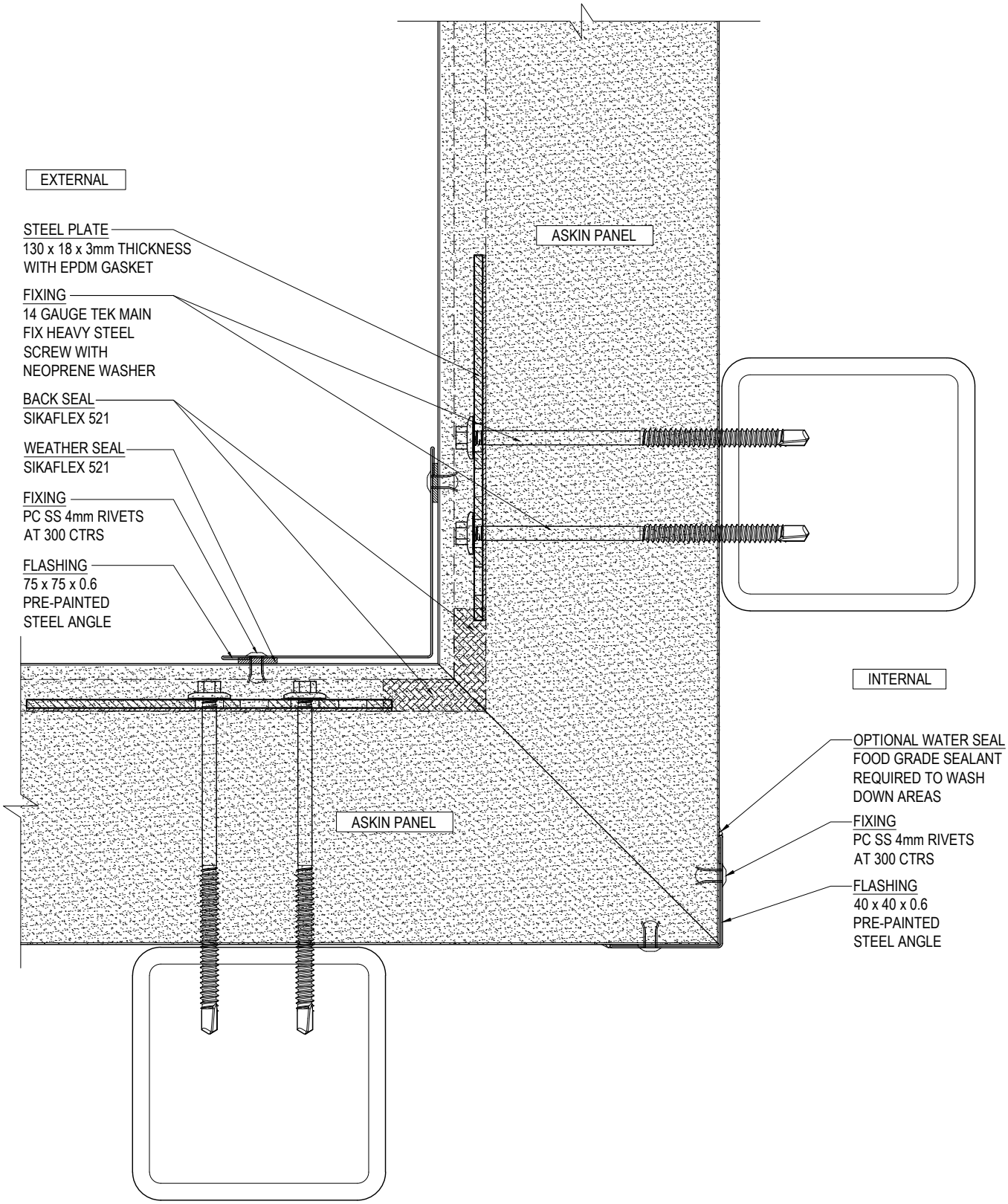

WALL TO WALL CONNECTION
DETAIL - PLAN VIEW
SCALE 1:2

ASKIN Performance Panels

www.askin.net.au

VIC	P : 03 8769 4816	WA	P : 08 9249 4022
SA	P : 08 8252 7188	QLD	P : 07 3718 9500
NSW	P : 02 8825 2598	NT	P : 08 8252 7188

PROJECT:

EXTERIORS - VIVID

STANDARD HORIZONTAL
WALL TO WALL
CONNECTION DETAILS

©ASKIN 2022

Revision

-	-	-
-	-	-
-	-	-
-	-	-
-	-	-
-	-	-
-	-	-

Checked By: A SHANNON	Scale: 1:2
Drawn By: R VORWERK	Sheet size: A4
Issue date: 09.09.2022	Revision: -
Drawing No.	EXTVIVID - 214

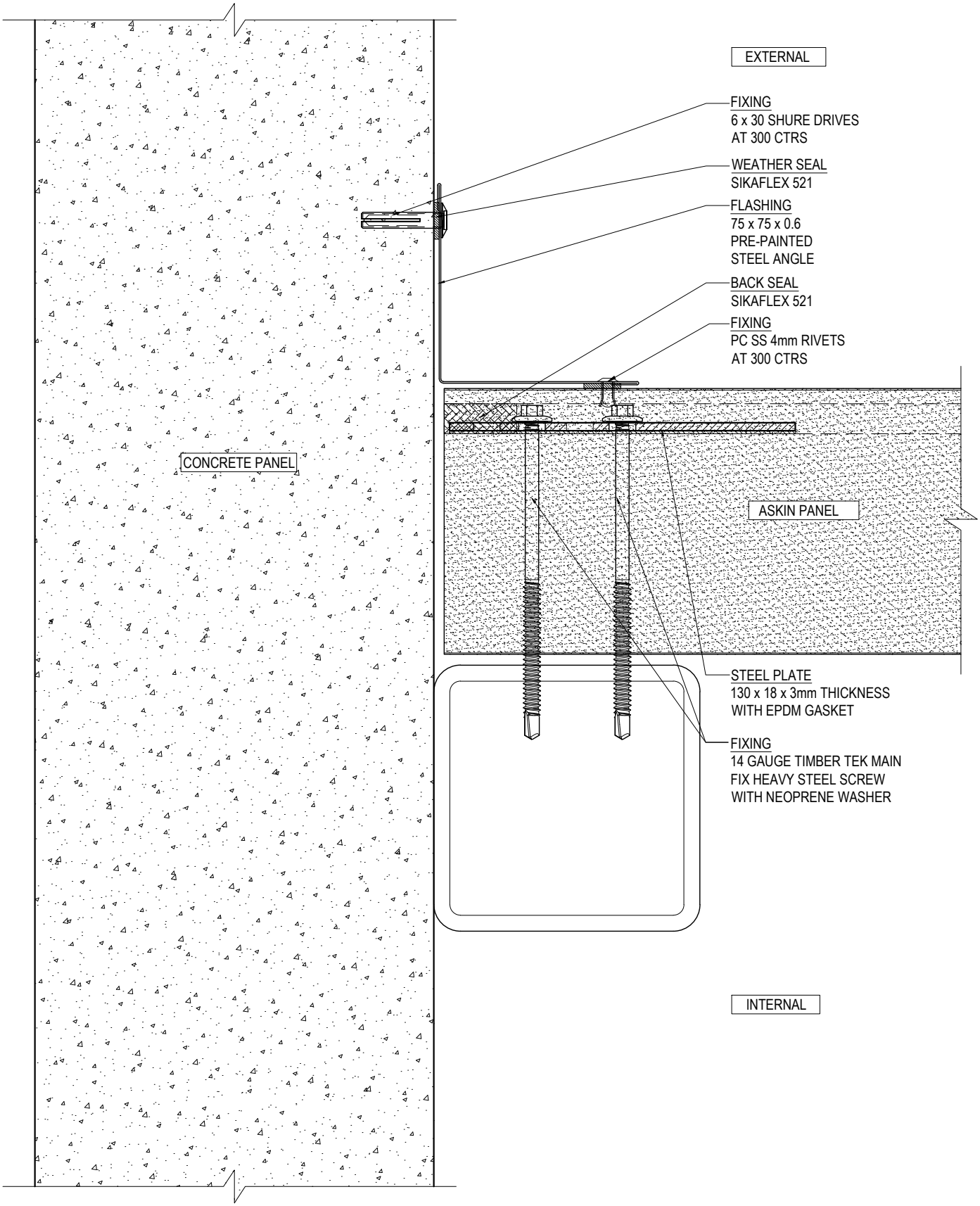

WALL TO WALL CONNECTION
DETAIL - PLAN VIEW
SCALE 1:2

ASKIN Performance Panels
www.askin.net.au
VIC P : 03 8769 4816 WA P : 08 9249 4022
SA P : 08 8252 7188 QLD P : 07 3718 9500
NSW P : 02 8825 2598 NT P : 08 8252 7188

PROJECT:
EXTERIORS - VIVID
STANDARD HORIZONTAL
WALL TO WALL
CONNECTION DETAILS

©ASKIN 2022

Revision		
-	-	-
-	-	-
-	-	-
-	-	-
-	-	-
-	-	-
-	-	-

Checked By: A SHANNON	Scale: 1:2
Drawn By: R VORWERK	Sheet size: A4
Issue date: 09.09.2022	Revision: -
Drawing No.	EXTVIVID - 215

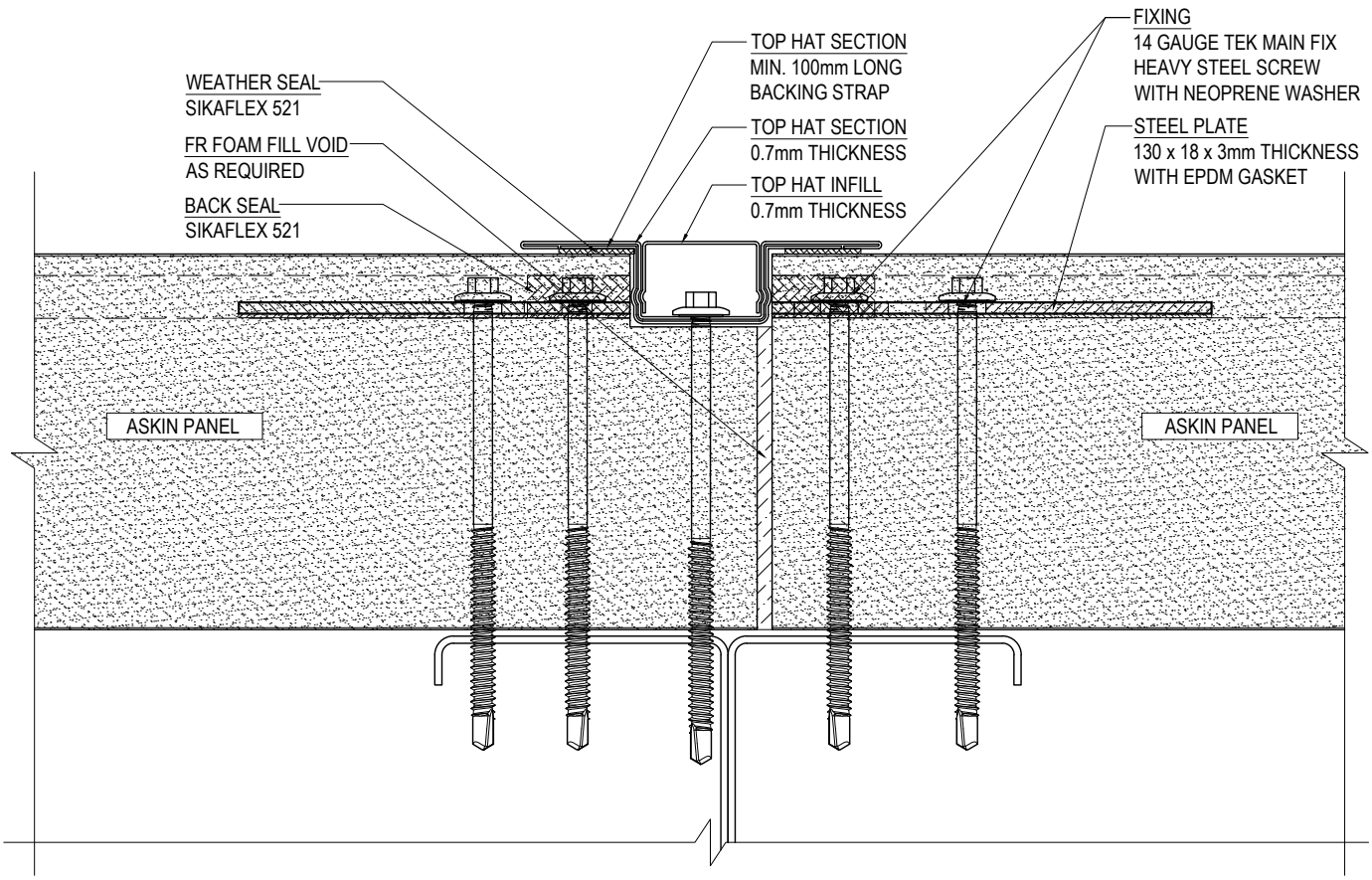

WALL TO WALL CONNECTION DETAIL - PLAN VIEW

SCALE 1:2

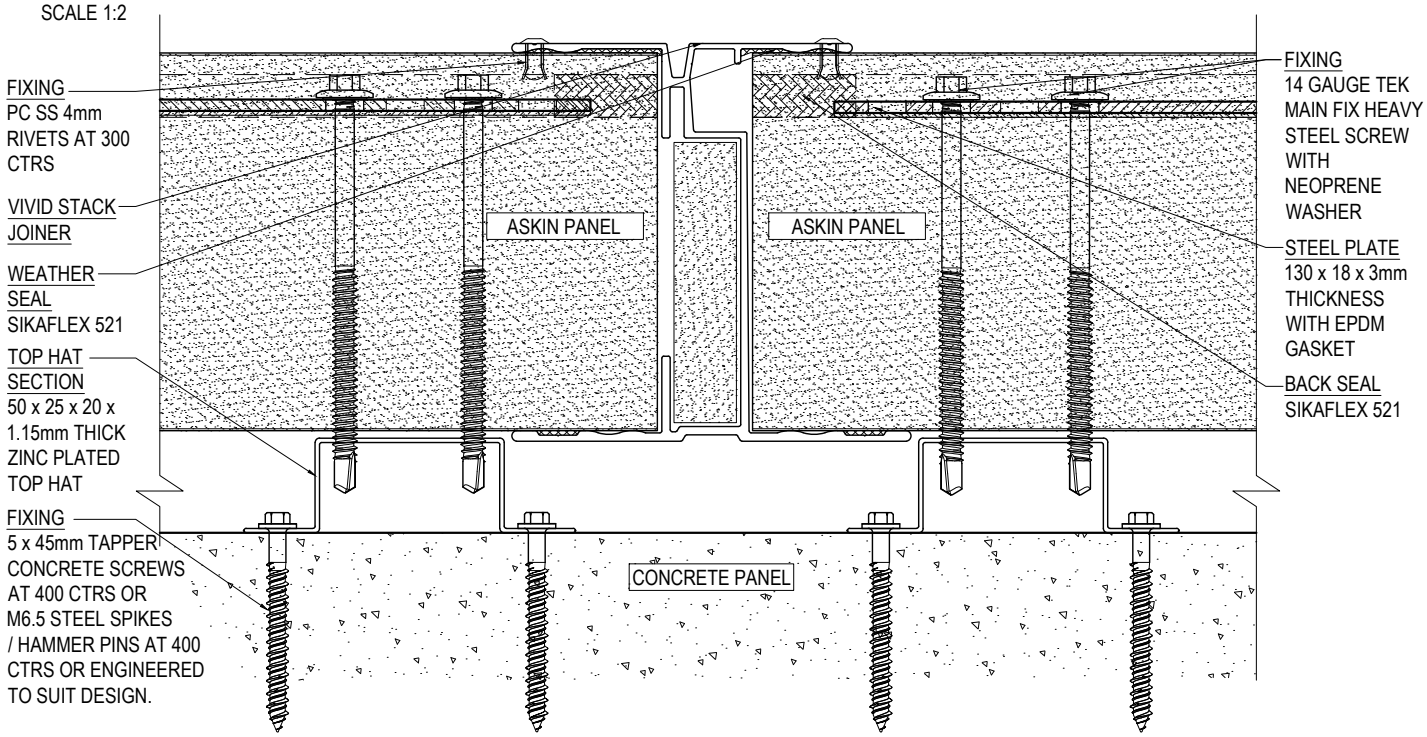

WALL TO WALL CONNECTION DETAIL - PLAN VIEW

SCALE 1:2

ASKIN Performance Panels

www.askin.net.au

VIC P : 03 8769 4816 WA P : 08 9249 4022
SA P : 08 8252 7188 QLD P : 07 3718 9500
NSW P : 02 8825 2598 NT P : 08 8252 7188

PROJECT:

EXTERIORS - VIVID

STANDARD HORIZONTAL
WALL TO WALL
CONNECTION DETAILS

©ASKIN 2022

Revision		
-	-	-
-	-	-
-	-	-
-	-	-
-	-	-
-	-	-
-	-	-

Checked By: A SHANNON	Scale: 1:2
Drawn By: R VORWERK	Sheet size: A4
Issue date: 09.09.2022	Revision: -
Drawing No.	EXTVIVID - 216

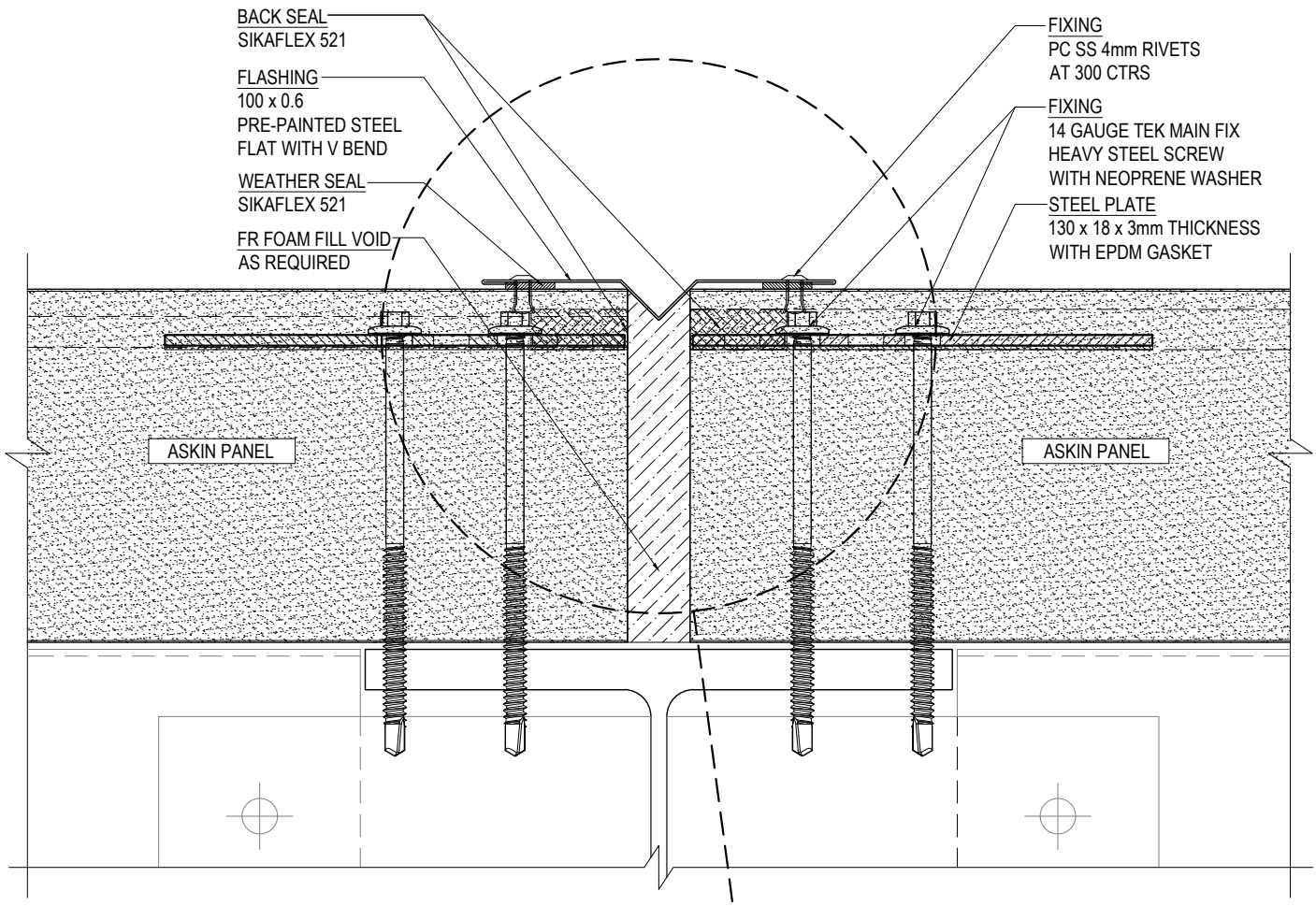

WALL TO WALL CONNECTION
DETAIL - PLAN VIEW
SCALE 1:2

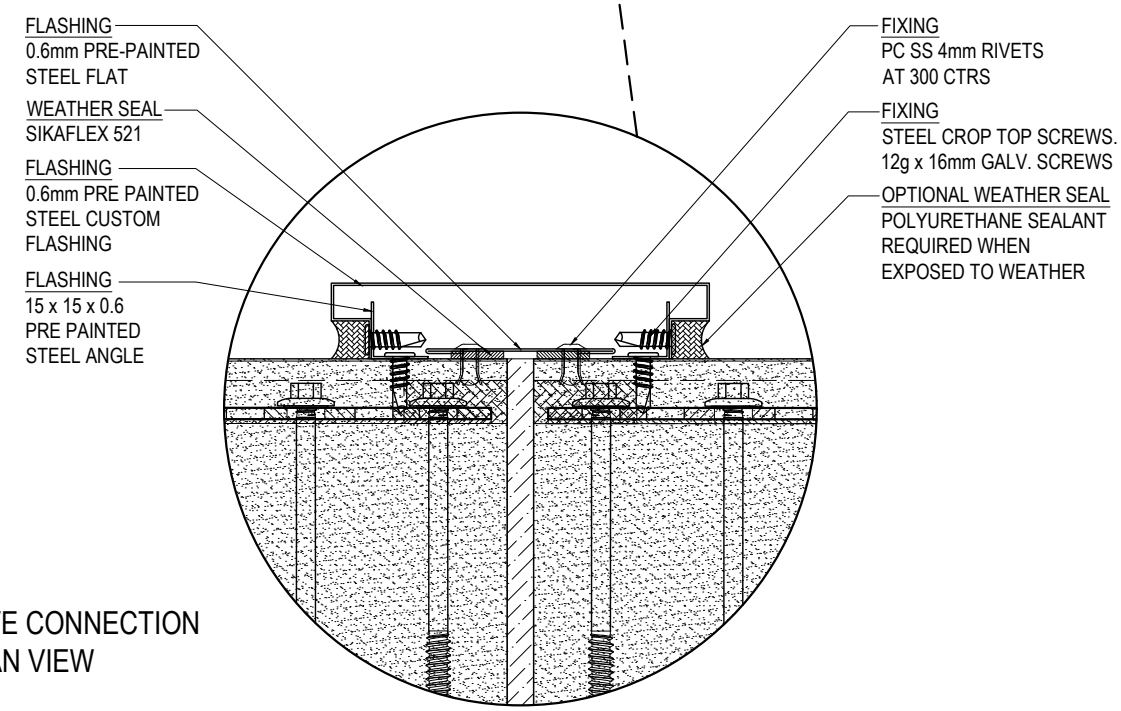

ALTERNATIVE CONNECTION
DETAIL - PLAN VIEW
SCALE 1:2

ASKIN Performance Panels

www.askin.net.au
VIC P : 03 8769 4816 WA P : 08 9249 4022
SA P : 08 8252 7188 QLD P : 07 3718 9500
NSW P : 02 8825 2598 NT P : 08 8252 7188

PROJECT:

EXTERIORS - VIVID

STANDARD HORIZONTAL
WALL TO WALL
CONNECTION DETAILS

©ASKIN 2022

Revision		
-	-	-
-	-	-
-	-	-
-	-	-
-	-	-
-	-	-
-	-	-

Checked By: A SHANNON	Scale: 1:2
Drawn By: R VORWERK	Sheet size: A4
Issue date: 09.09.2022	Revision: -
Drawing No.	

EXTVIVID - 217

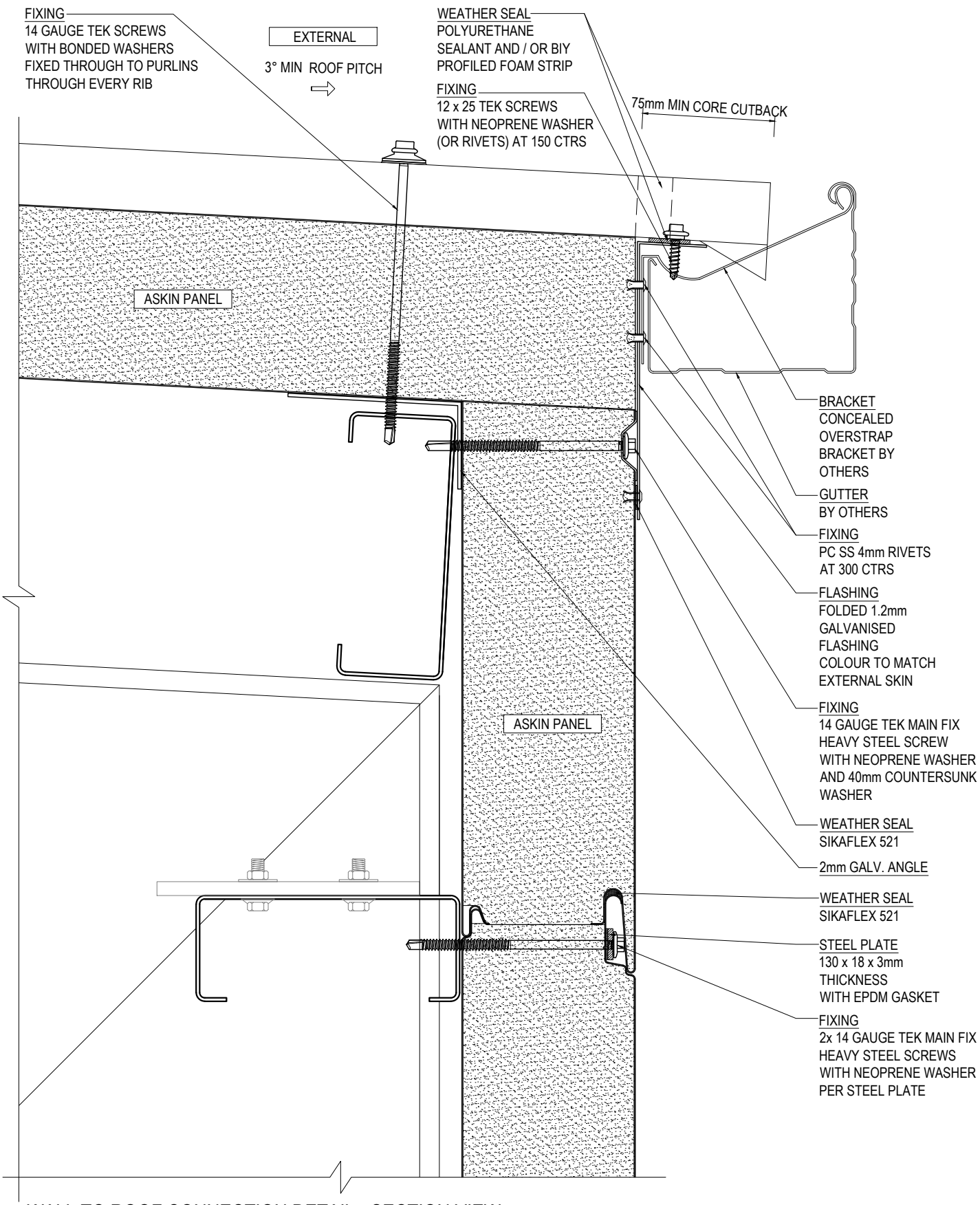

WALL TO ROOF CONNECTION DETAIL - SECTION VIEW

SCALE 1:3

ASKIN Performance Panels

www.askin.net.au

VIC P : 03 8769 4816 WA P : 08 9249 4022
SA P : 08 8252 7188 QLD P : 07 3718 9500
NSW P : 02 8825 2598 NT P : 08 8252 7188

PROJECT:

EXTERIORS - VIVID

STANDARD HORIZONTAL ROOFING AND PARAPET CONNECTION DETAILS

©ASKIN 2022

Revision

-	-	-
-	-	-
-	-	-
-	-	-
-	-	-
-	-	-
-	-	-

Checked By: A SHANNON	Scale: 1:3
Drawn By: R VORWERK	Sheet size: A4
Issue date: 09.09.2022	Revision: -
Drawing No.	EXTVIVID - 220

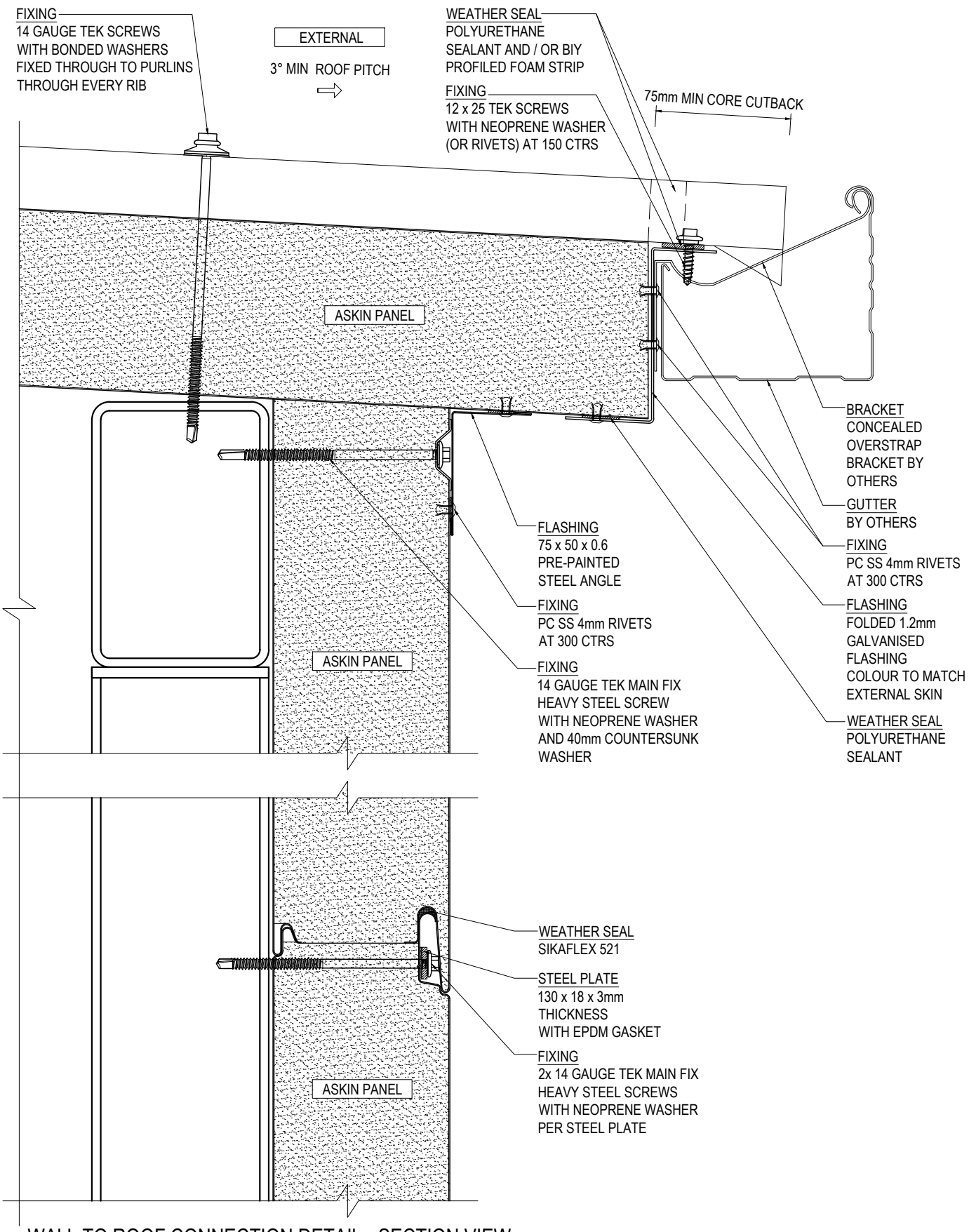

WALL TO ROOF CONNECTION DETAIL - SECTION VIEW

SCALE 1:3

ASKIN Performance Panels

www.askin.net.au

VIC	P : 03 8769 4816	WA	P : 08 9249 4022
SA	P : 08 8252 7188	QLD	P : 07 3718 9500
NSW	P : 02 8825 2598	NT	P : 08 8252 7188

PROJECT:

EXTERIORS - VIVID

STANDARD HORIZONTAL ROOFING AND PARAPET CONNECTION DETAILS

©ASKIN 2022

Revision

-	-	-
-	-	-
-	-	-
-	-	-
-	-	-
-	-	-
-	-	-

Checked By: A SHANNON	Scale: 1:3
Drawn By: R VORWERK	Sheet size: A4
Issue date: 09.09.2022	Revision: -
Drawing No.	EXTVIVID - 221

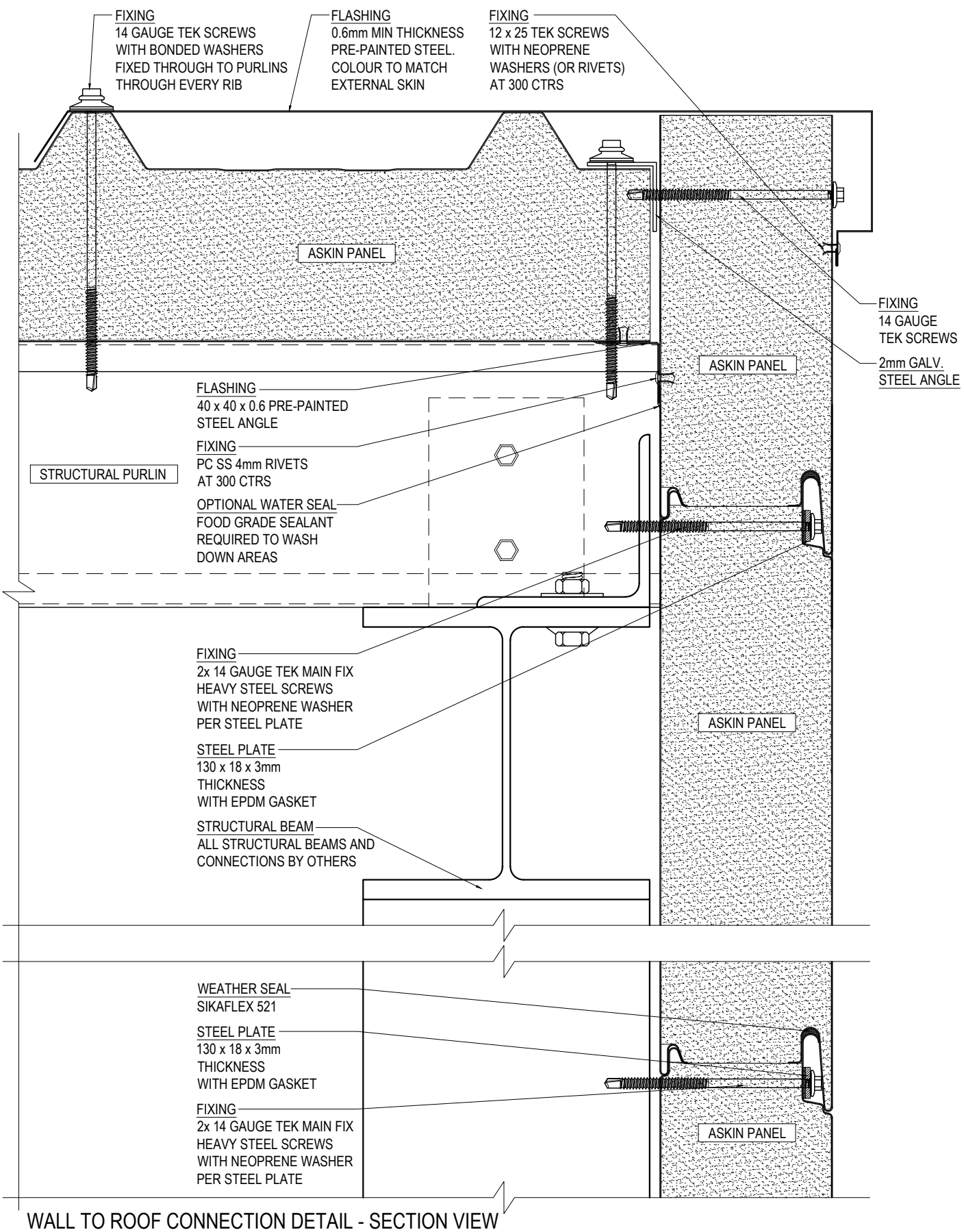

WALL TO ROOF CONNECTION DETAIL - SECTION VIEW

SCALE 1:3

ASKIN Performance Panels

www.askin.net.au

VIC	P : 03 8769 4816	WA	P : 08 9249 4022
SA	P : 08 8252 7188	QLD	P : 07 3718 9500
NSW	P : 02 8825 2598	NT	P : 08 8252 7188

PROJECT:

EXTERIORS - VIVID

STANDARD HORIZONTAL ROOFING AND PARAPET CONNECTION DETAILS

©ASKIN 2022

Revision

-	-	-
-	-	-
-	-	-
-	-	-
-	-	-
-	-	-
-	-	-

Checked By: A SHANNON	Scale: 1:3
Drawn By: R VORWERK	Sheet size: A4
Issue date: 09.09.2022	Revision: -
Drawing No.	EXTVIVID - 222

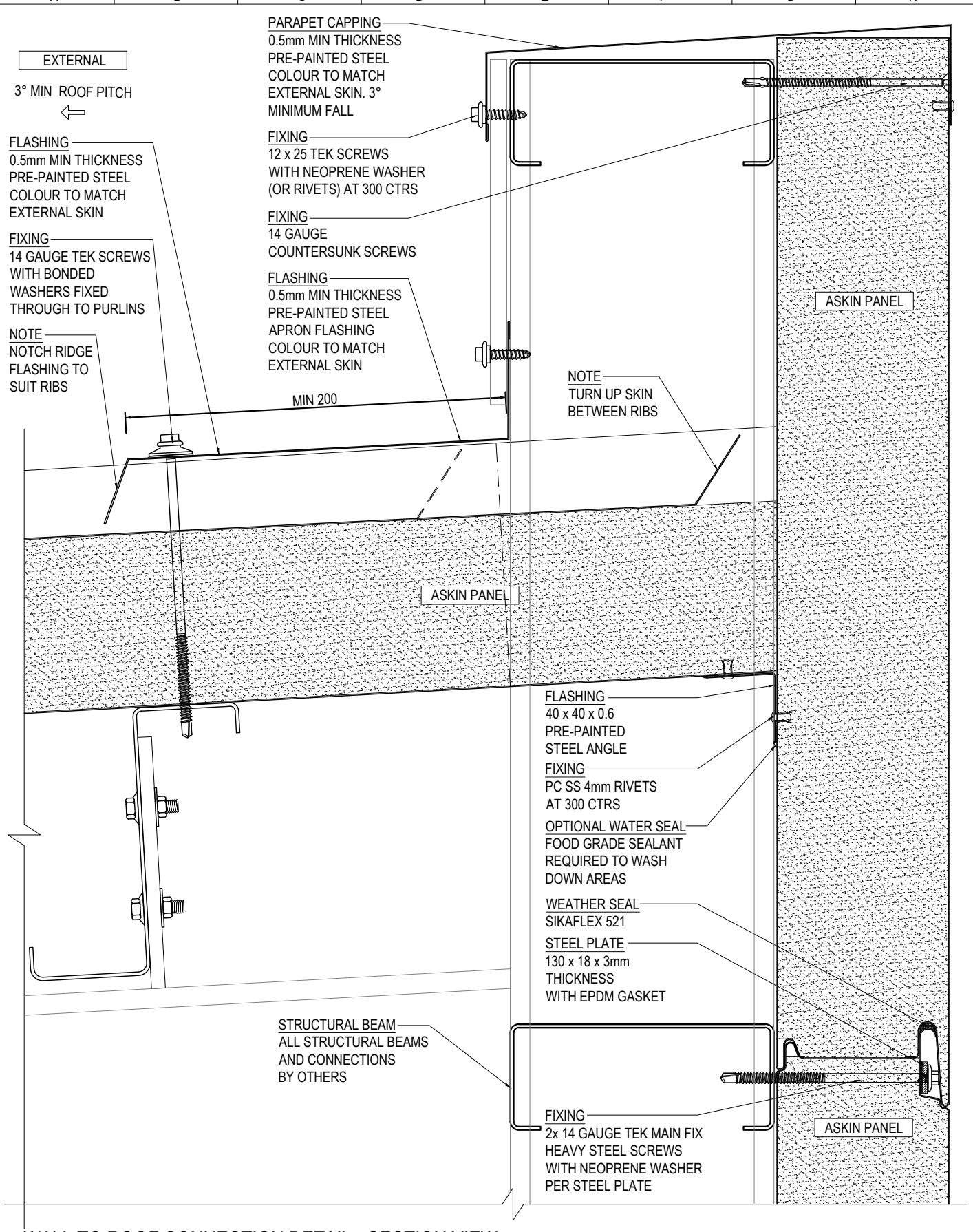

WALL TO ROOF CONNECTION DETAIL - SECTION VIEW

SCALE 1:3

ASKIN Performance Panels
www.askin.net.au
VIC P : 03 8769 4816 WA P : 08 9249 4022
SA P : 08 8252 7188 QLD P : 07 3718 9500
NSW P : 02 8825 2598 NT P : 08 8252 7188

PROJECT:

EXTERIORS - VIVID

STANDARD HORIZONTAL ROOFING AND PARAPET CONNECTION DETAILS

©ASKIN 2022

Revision		
-	-	-
-	-	-
-	-	-
-	-	-
-	-	-
-	-	-
-	-	-

Checked By: A SHANNON	Scale: 1:3
Drawn By: R VORWERK	Sheet size: A4
Issue date: 09.09.2022	Revision: -
Drawing No.	EXTVIVID - 223

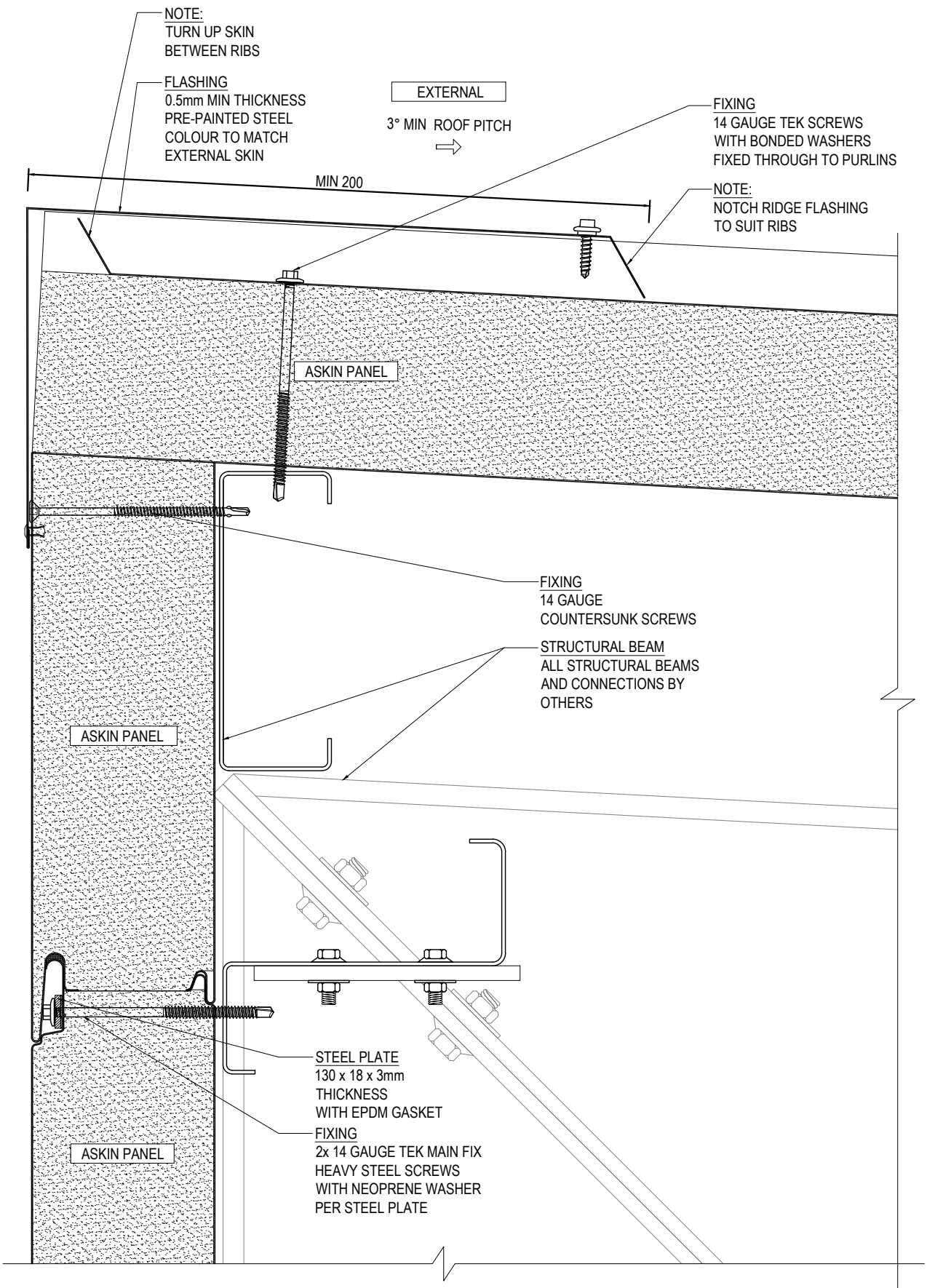

WALL TO ROOF CONNECTION DETAIL - SECTION VIEW

SCALE 1:3

ASKIN Performance Panels
www.askin.net.au
VIC P : 03 8769 4816 WA P : 08 9249 4022
SA P : 08 8252 7188 QLD P : 07 3718 9500
NSW P : 02 8825 2598 NT P : 08 8252 7188

PROJECT:

EXTERIORS - VIVID

STANDARD HORIZONTAL ROOFING AND PARAPET CONNECTION DETAILS

©ASKIN 2022

Revision		
-	-	-
-	-	-
-	-	-
-	-	-
-	-	-
-	-	-
-	-	-

Checked By: A SHANNON	Scale: 1:3
Drawn By: R VORWERK	Sheet size: A4
Issue date: 09.09.2022	Revision: -
Drawing No.	EXTVIVID - 224

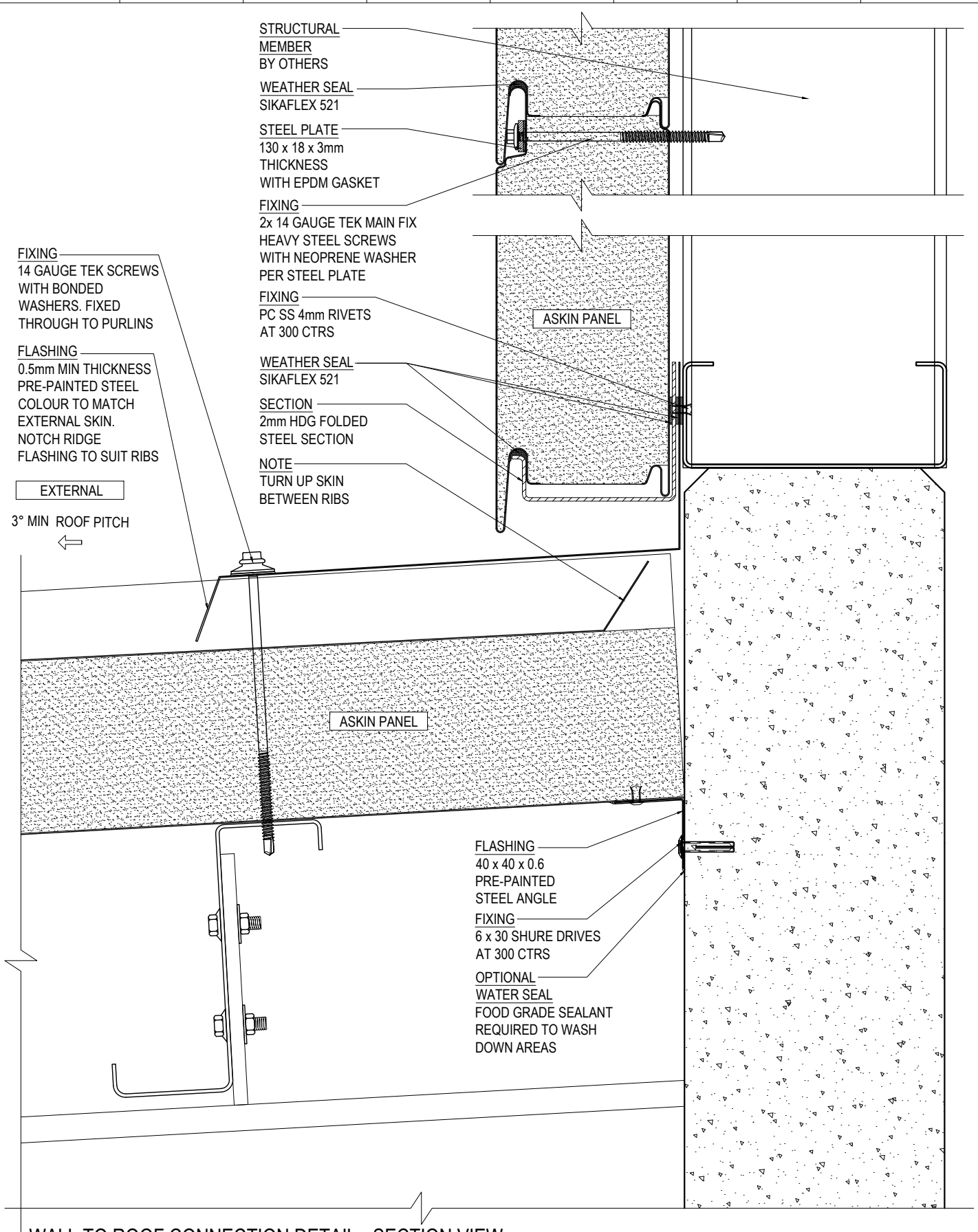

WALL TO ROOF CONNECTION DETAIL - SECTION VIEW

SCALE 1:3

ASKIN Performance Panels

www.askin.net.au

VIC	P : 03 8769 4816	WA	P : 08 9249 4022
SA	P : 08 8252 7188	QLD	P : 07 3718 9500
NSW	P : 02 8825 2598	NT	P : 08 8252 7188

PROJECT:

EXTERIORS - VIVID

STANDARD HORIZONTAL ROOFING AND PARAPET CONNECTION DETAILS

©ASKIN 2022

Revision

-	-	-
-	-	-
-	-	-
-	-	-
-	-	-
-	-	-
-	-	-

Checked By: A SHANNON	Scale: 1:3
Drawn By: R VORWERK	Sheet size: A4
Issue date: 09.09.2022	Revision: -
Drawing No.	EXTVIVID - 225

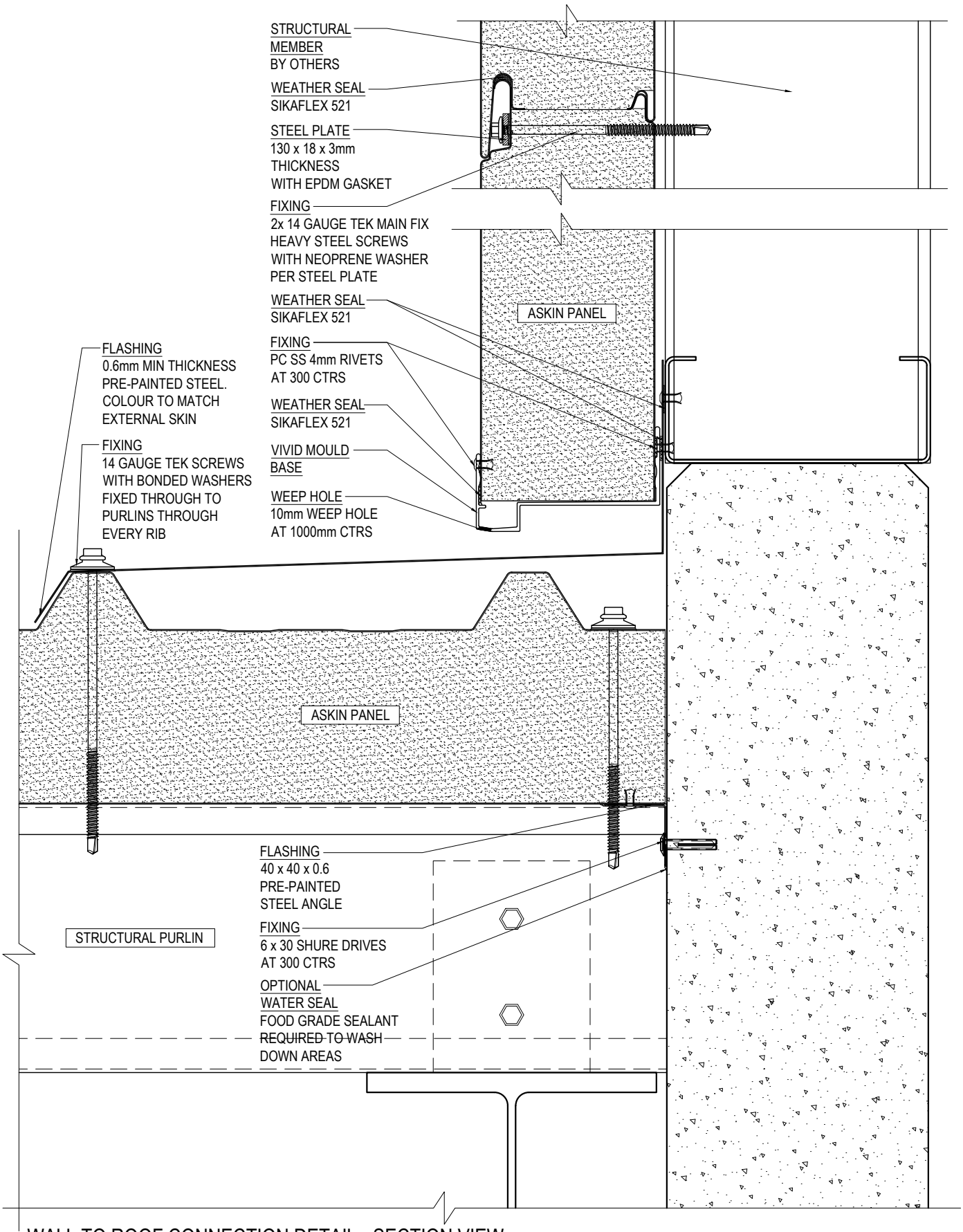

WALL TO ROOF CONNECTION DETAIL - SECTION VIEW

SCALE 1:3

ASKIN Performance Panels
www.askin.net.au
VIC P : 03 8769 4816 WA P : 08 9249 4022
SA P : 08 8252 7188 QLD P : 07 3718 9500
NSW P : 02 8825 2598 NT P : 08 8252 7188

PROJECT:

EXTERIORS - VIVID

STANDARD HORIZONTAL ROOFING AND PARAPET CONNECTION DETAILS

Revision

-	-	-
-	-	-
-	-	-
-	-	-
-	-	-
-	-	-
-	-	-

Checked By: A SHANNON	Scale: 1:3
Drawn By: R VORWERK	Sheet size: A4
Issue date: 09.09.2022	Revision: -
Drawing No.	EXTVIVID - 226

©ASKIN 2022

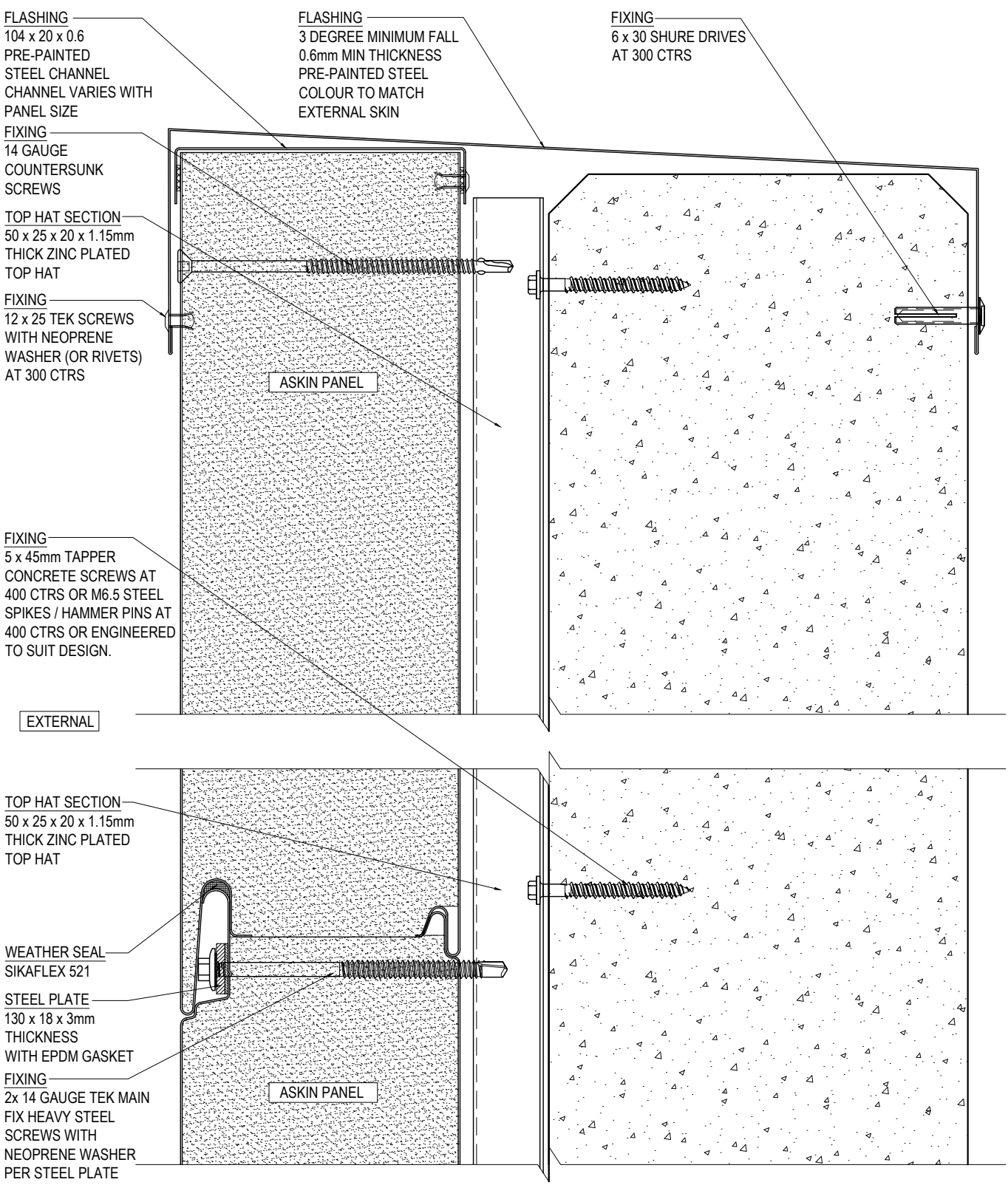

WALL TO ROOF CONNECTION DETAIL - SECTION VIEW

SCALE 1:2

ASKIN Performance Panels

www.askin.net.au

VIC	P : 03 8769 4816	WA	P : 08 9249 4022
SA	P : 08 8252 7188	QLD	P : 07 3718 9500
NSW	P : 02 8825 2598	NT	P : 08 8252 7188

PROJECT:

EXTERIORS - VIVID

STANDARD HORIZONTAL ROOFING AND PARAPET CONNECTION DETAILS

Revision

-	-	-
-	-	-
-	-	-
-	-	-
-	-	-
-	-	-
-	-	-

Checked By: A SHANNON	Scale: 1:2
Drawn By: R VORWERK	Sheet size: A4
Issue date: 09.09.2022	Revision: -
Drawing No.	EXTVIVID - 227

©ASKIN 2022

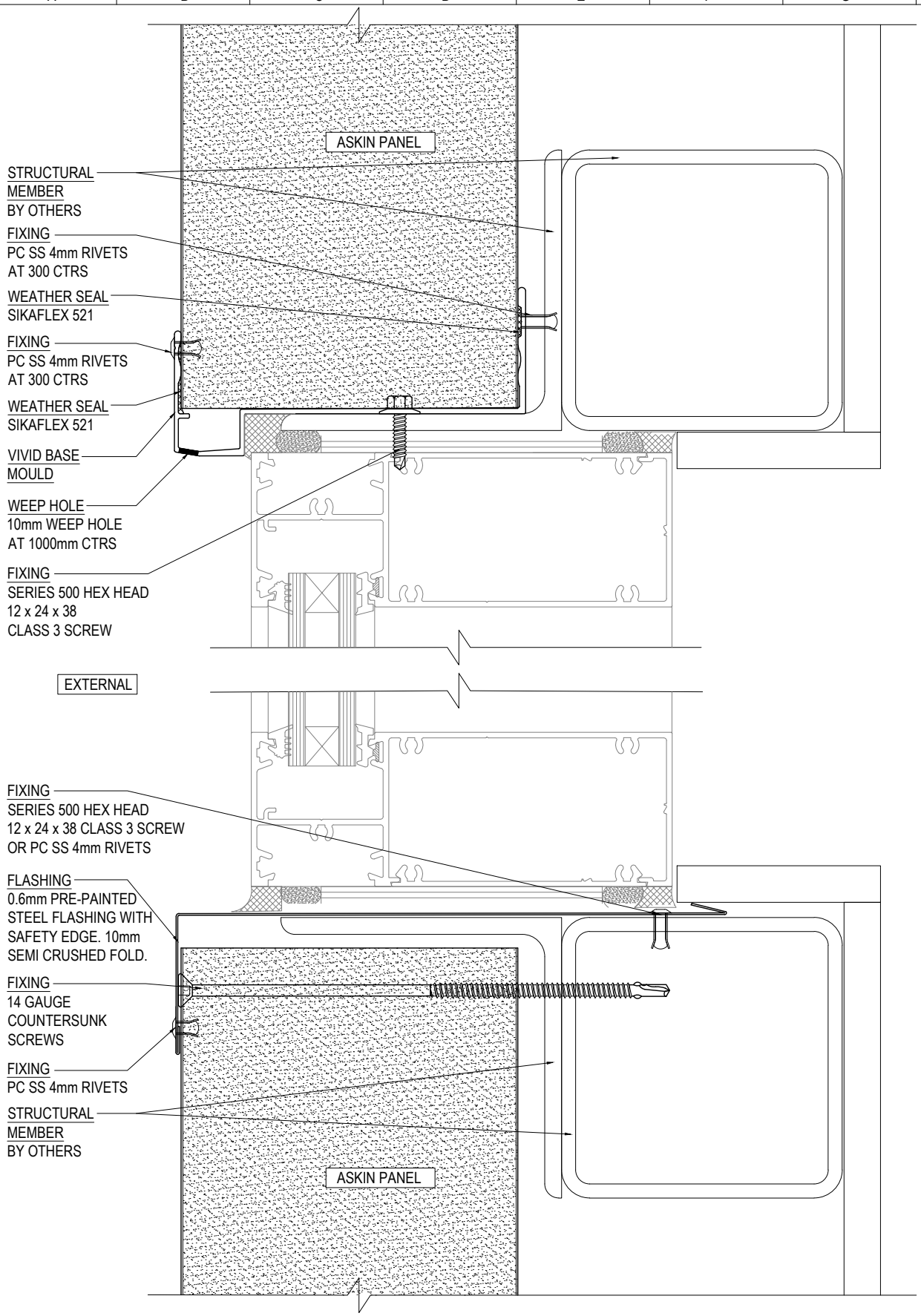

WINDOW CONNECTION DETAIL - SECTION VIEW

SCALE 1:2

ASKIN Performance Panels

www.askin.net.au

VIC P : 03 8769 4816 WA P : 08 9249 4022
SA P : 08 8252 7188 QLD P : 07 3718 9500
NSW P : 02 8825 2598 NT P : 08 8252 7188

PROJECT:

EXTERIORS - VIVID

STANDARD HORIZONTAL WINDOW CONNECTION DETAILS

©ASKIN 2022

Revision

-	-	-
-	-	-
-	-	-
-	-	-
-	-	-
-	-	-
-	-	-

Checked By: A SHANNON	Scale: 1:2
Drawn By: R VORWERK	Sheet size: A4
Issue date: 09.09.2022	Revision: -
Drawing No.	EXTVIVID - 230

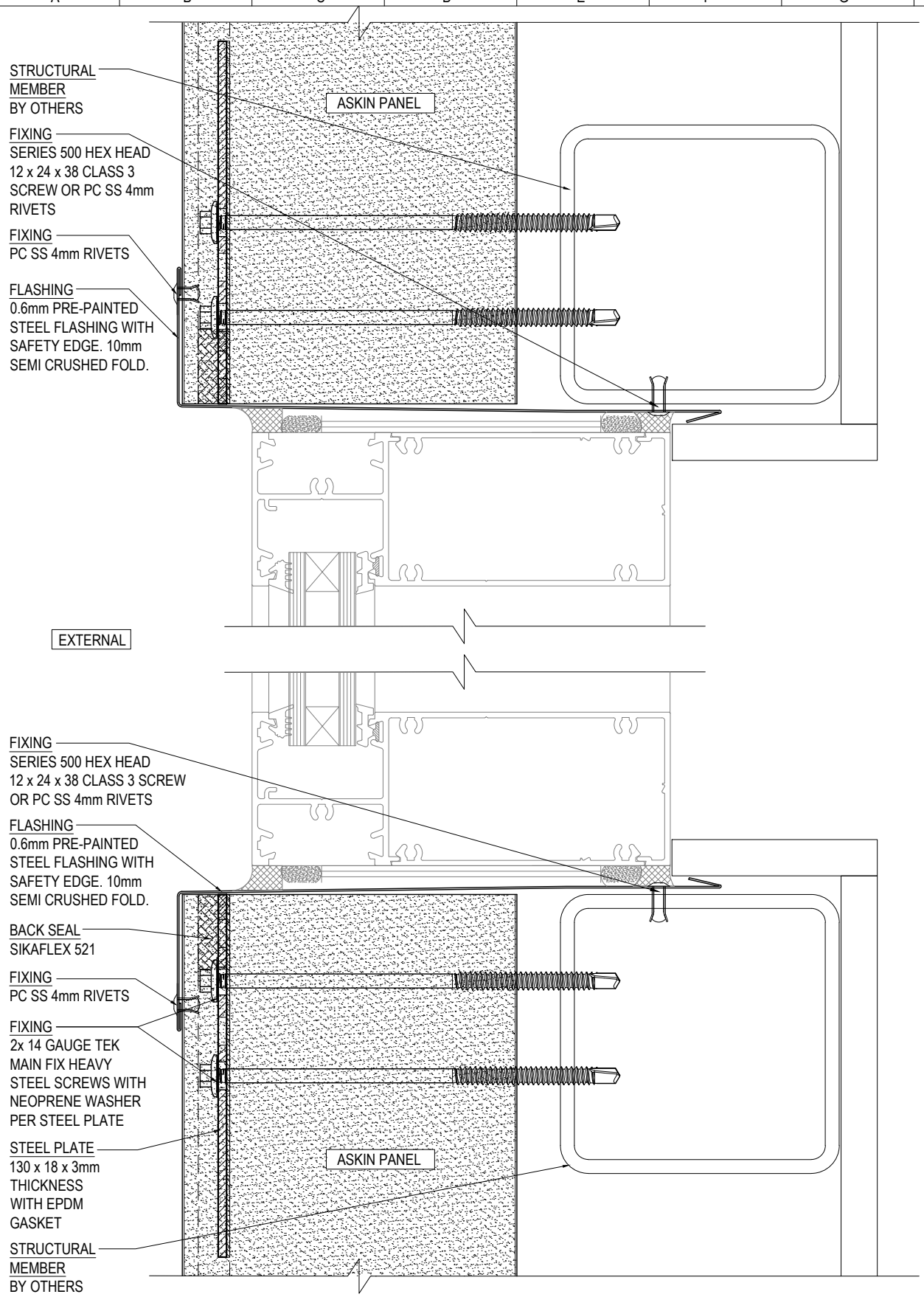

WINDOW CONNECTION DETAIL - PLAN VIEW

SCALE 1:2

ASKIN Performance Panels
www.askin.net.au
VIC P : 03 8769 4816 WA P : 08 9249 4022
SA P : 08 8252 7188 QLD P : 07 3718 9500
NSW P : 02 8825 2598 NT P : 08 8252 7188

PROJECT:

EXTERIORS - VIVID

STANDARD HORIZONTAL WINDOW CONNECTION DETAILS

©ASKIN 2022

Revision		
-	-	-
-	-	-
-	-	-
-	-	-
-	-	-
-	-	-
-	-	-

Checked By: A SHANNON	Scale: 1:2
Drawn By: R VORWERK	Sheet size: A4
Issue date: 09.09.2022	Revision: -
Drawing No.	EXTVIVID - 231

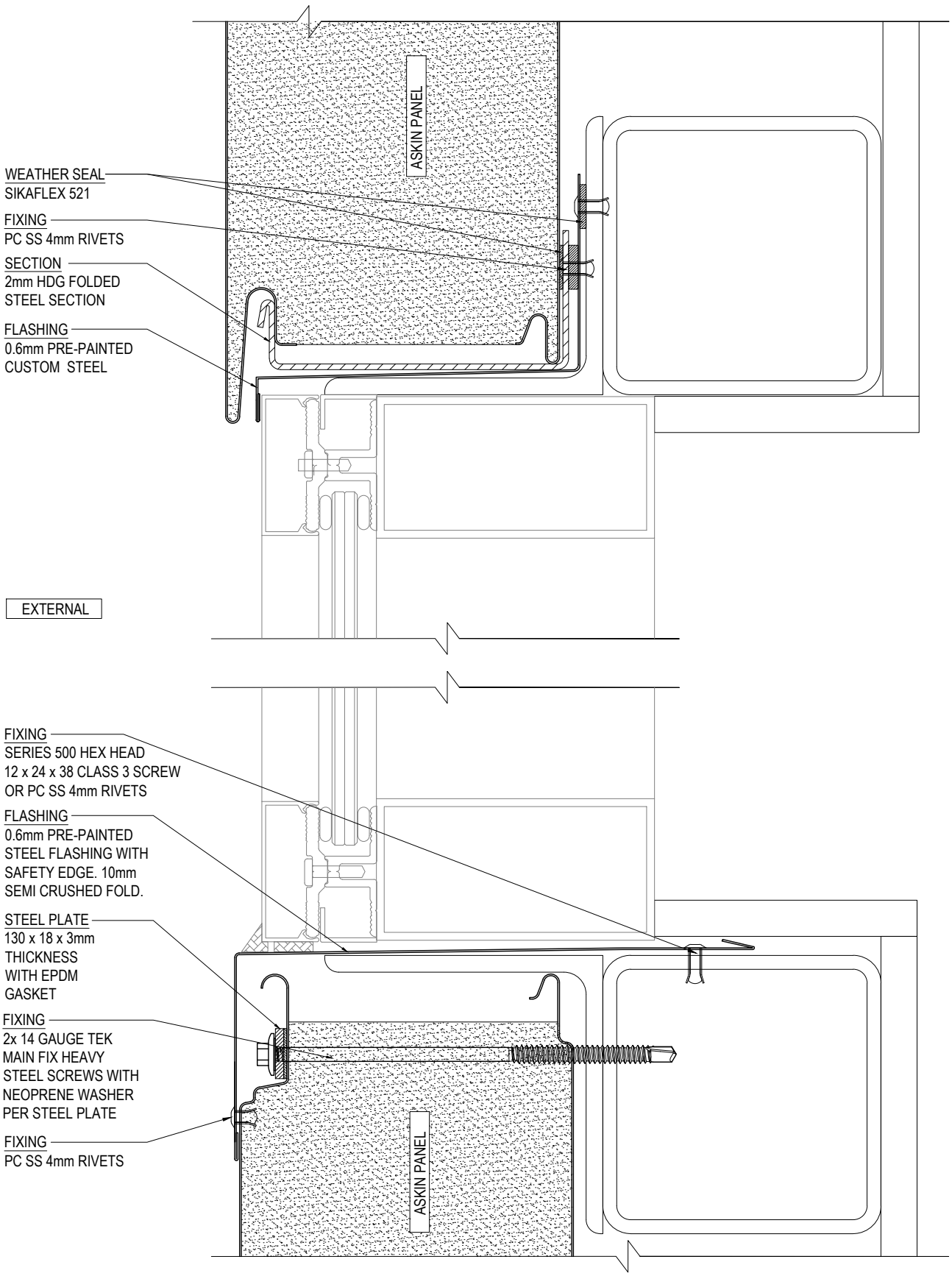

WINDOW CONNECTION DETAIL - SECTION VIEW

SCALE 1:2

ASKIN Performance Panels
www.askin.net.au
VIC P : 03 8769 4816 WA P : 08 9249 4022
SA P : 08 8252 7188 QLD P : 07 3718 9500
NSW P : 02 8825 2598 NT P : 08 8252 7188

PROJECT:

EXTERIORS - VIVID

STANDARD HORIZONTAL WINDOW CONNECTION DETAILS

©ASKIN 2022

Revision

-	-	-
-	-	-
-	-	-
-	-	-
-	-	-
-	-	-
-	-	-

Checked By: A SHANNON	Scale: 1:2
Drawn By: R VORWERK	Sheet size: A4
Issue date: 09.09.2022	Revision: -
Drawing No.	EXTVIVID - 232

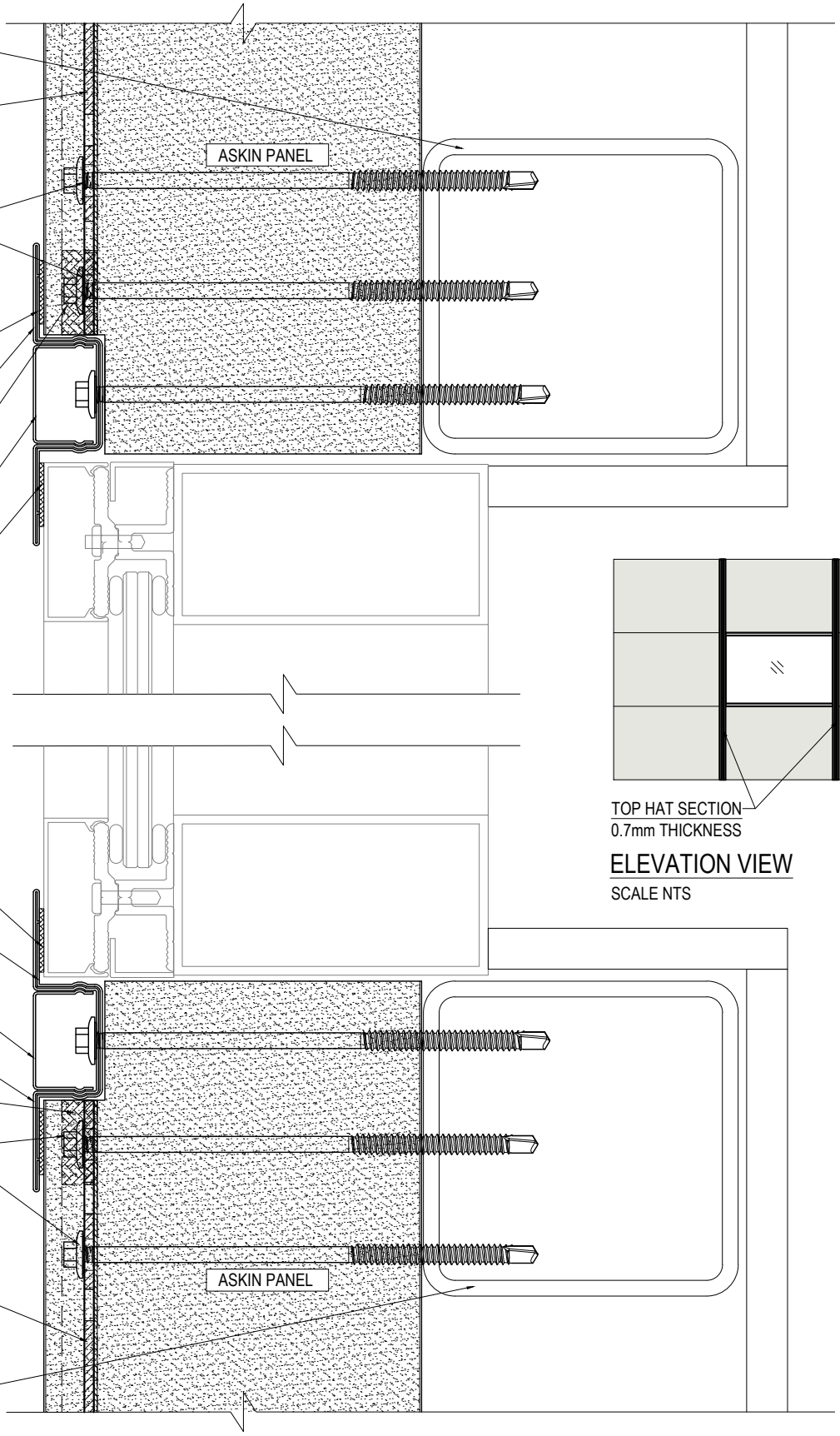

WINDOW CONNECTION DETAIL - PLAN VIEW

SCALE 1:2

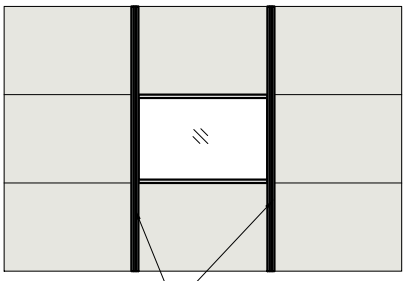

ELEVATION VIEW

SCALE NTS

ASKIN Performance Panels

www.askin.net.au

VIC P : 03 8769 4816 WA P : 08 9249 4022
SA P : 08 8252 7188 QLD P : 07 3718 9500
NSW P : 02 8825 2598 NT P : 08 8252 7188

PROJECT:

EXTERIORS - VIVID

STANDARD HORIZONTAL WINDOW CONNECTION DETAILS

©ASKIN 2022

Revision		
-	-	-
-	-	-
-	-	-
-	-	-
-	-	-
-	-	-
-	-	-

Checked By: A SHANNON	Scale: 1:2
Drawn By: R VORWERK	Sheet size: A4
Issue date: 09.09.2022	Revision: -
Drawing No.	EXTVIVID - 233

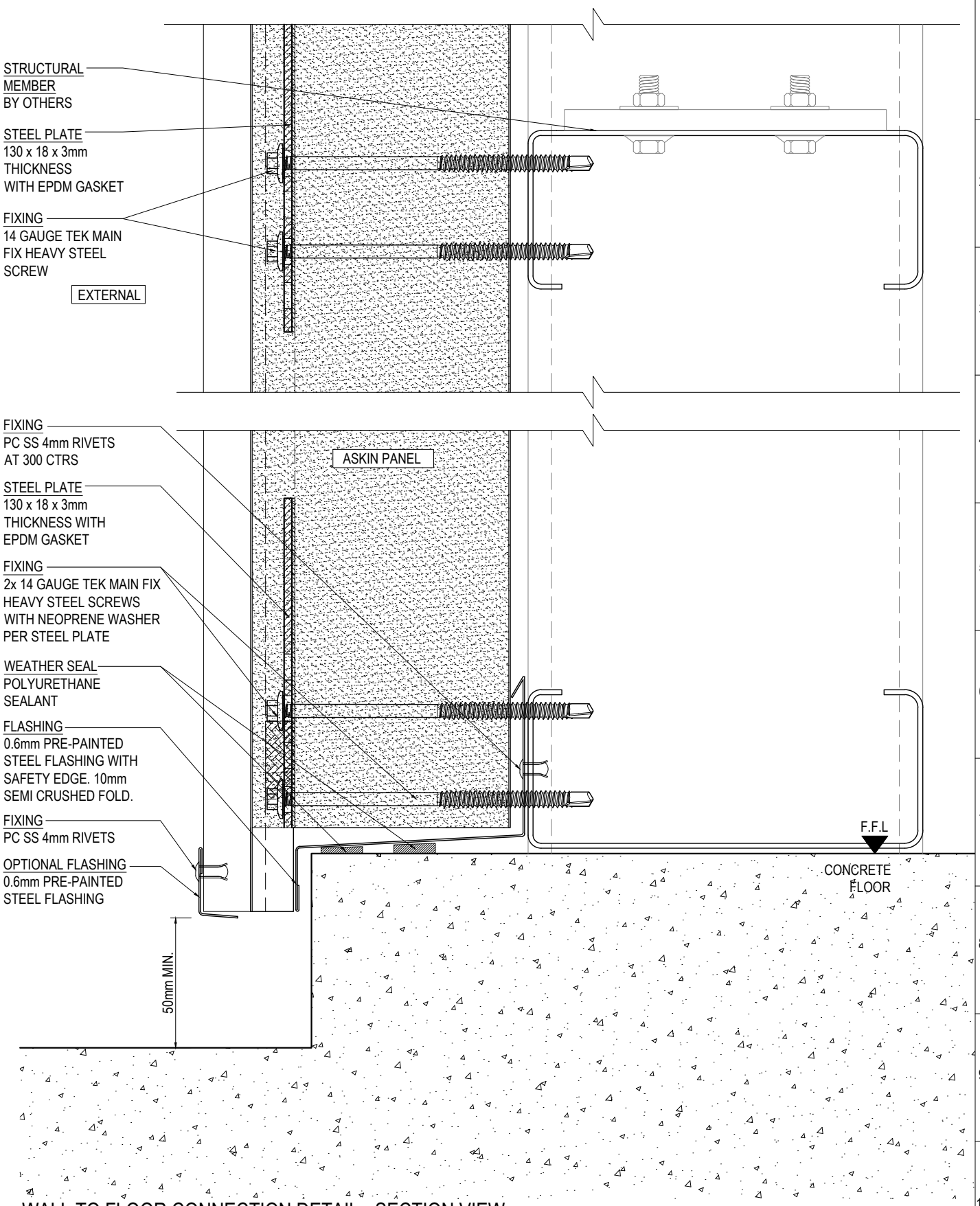

WALL TO FLOOR CONNECTION DETAIL - SECTION VIEW

SCALE 1:2

ASKIN Performance Panels

www.askin.net.au

VIC	P : 03 8769 4816	WA	P : 08 9249 4022
SA	P : 08 8252 7188	QLD	P : 07 3718 9500
NSW	P : 02 8825 2598	NT	P : 08 8252 7188

PROJECT:

EXTERIORS - VIVID

TRANSFORM PROFILE
VERTICAL WALL TO FLOOR
CONNECTION DETAIL

©ASKIN 2022

Revision

-	-	-
-	-	-
-	-	-
-	-	-
-	-	-
-	-	-
-	-	-

Checked By: A SHANNON	Scale: 1:2
Drawn By: R VORWERK	Sheet size: A4
Issue date: 09.09.2022	Revision: -
Drawing No.	EXTVIVID - 300

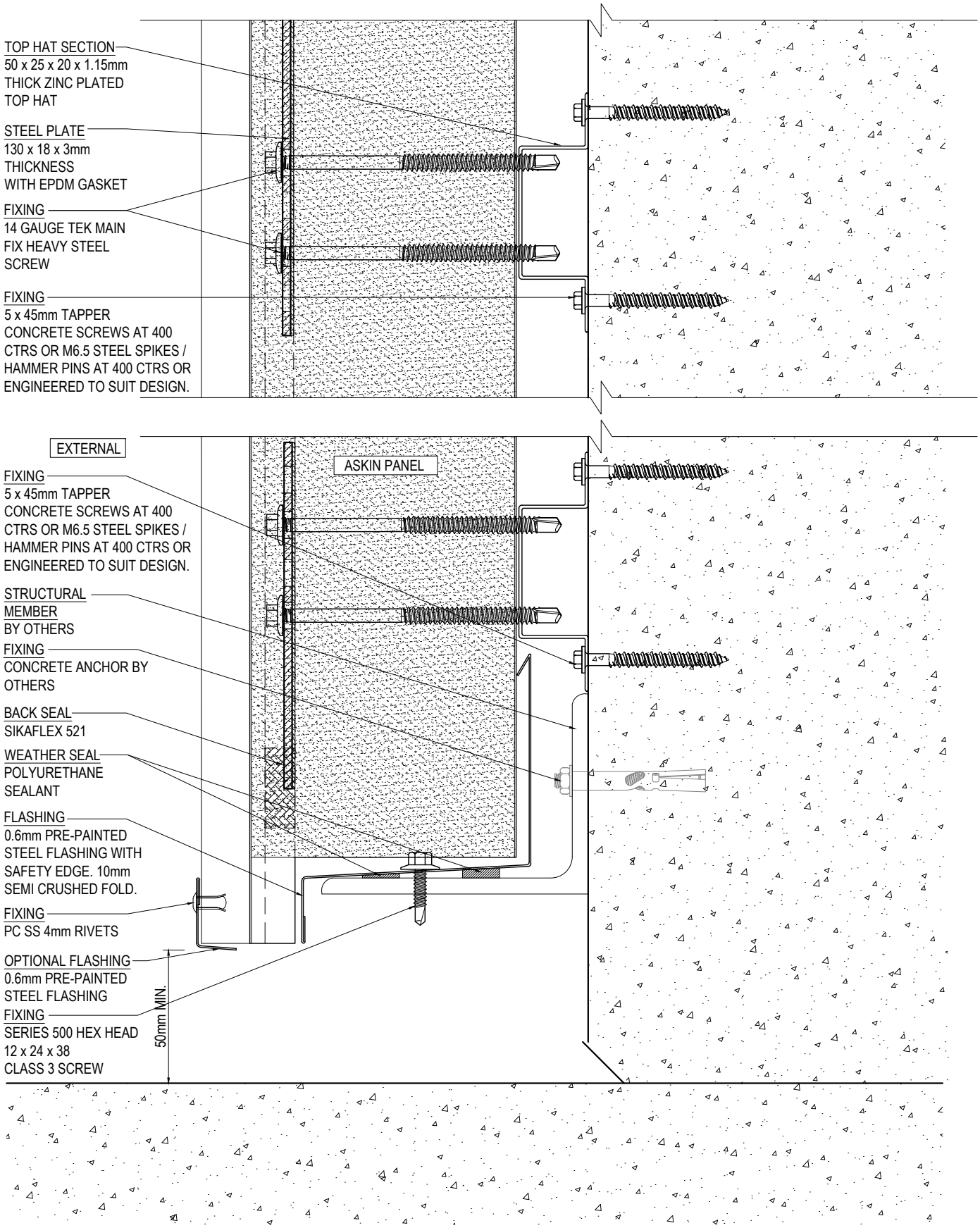

WALL TO CONCRETE WALL CONNECTION DETAIL - SECTION VIEW

SCALE 1:2

ASKIN Performance Panels
www.askin.net.au
VIC P : 03 8769 4816 WA P : 08 9249 4022
SA P : 08 8252 7188 QLD P : 07 3718 9500
NSW P : 02 8825 2598 NT P : 08 8252 7188

PROJECT:

EXTERIORS - VIVID

TRANSFORM PROFILE
VERTICAL WALL TO FLOOR
CONNECTION DETAIL

©ASKIN 2022

Revision		
-	-	-
-	-	-
-	-	-
-	-	-
-	-	-
-	-	-
-	-	-

Checked By: A SHANNON	Scale: 1:2
Drawn By: R VORWERK	Sheet size: A4
Issue date: 09.09.2022	Revision: -
Drawing No.	EXTVIVID - 301

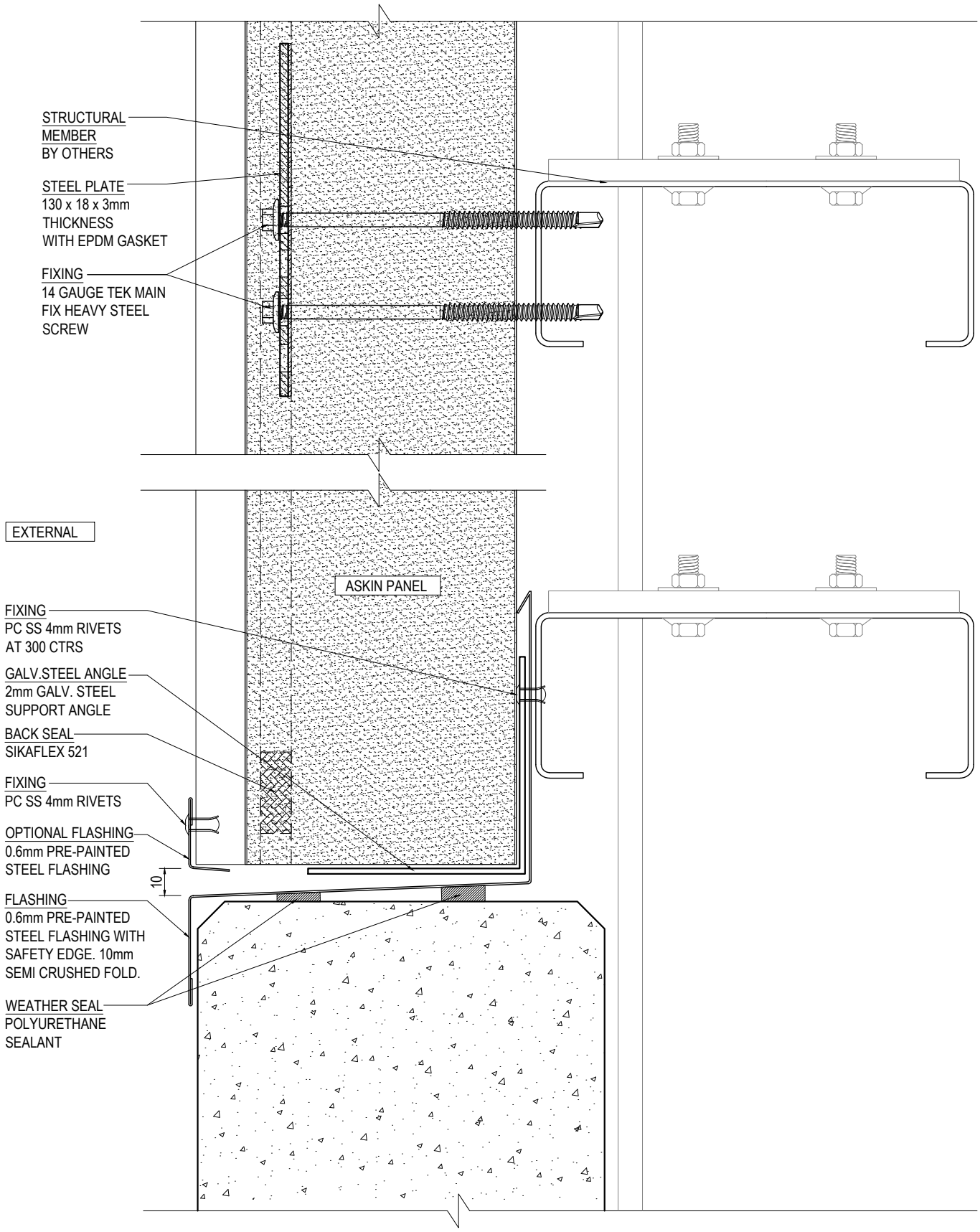

WALL TO CONCRETE PLINTH CONNECTION DETAIL - SECTION VIEW

SCALE 1:2

ASKIN Performance Panels
www.askin.net.au
VIC P : 03 8769 4816 WA P : 08 9249 4022
SA P : 08 8252 7188 QLD P : 07 3718 9500
NSW P : 02 8825 2598 NT P : 08 8252 7188

PROJECT:

EXTERIORS - VIVID

TRANSFORM PROFILE
VERTICAL WALL TO FLOOR
CONNECTION DETAIL

©ASKIN 2022

Revision		
-	-	-
-	-	-
-	-	-
-	-	-
-	-	-
-	-	-
-	-	-

Checked By: A SHANNON	Scale: 1:2
Drawn By: R VORWERK	Sheet size: A4
Issue date: 09.09.2022	Revision: -
Drawing No.	EXTVIVID - 302

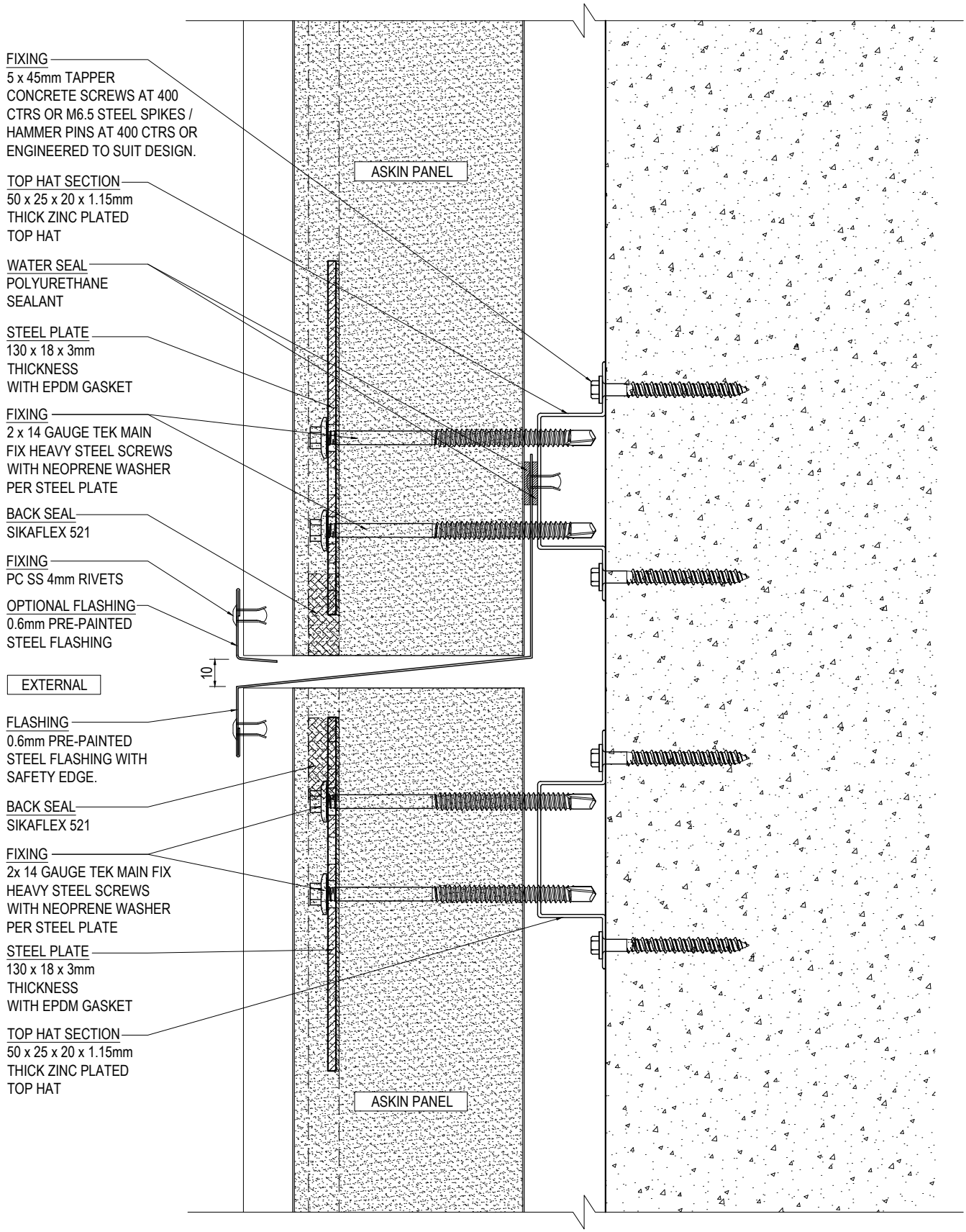

WALL TO WALL STACK JOINT CONNECTION DETAIL - SECTION VIEW

SCALE 1:2

ASKIN Performance Panels
www.askin.net.au
VIC P : 03 8769 4816 WA P : 08 9249 4022
SA P : 08 8252 7188 QLD P : 07 3718 9500
NSW P : 02 8825 2598 NT P : 08 8252 7188

PROJECT:

EXTERIORS - VIVID

TRANSFORM PROFILE VERTICAL WALL TO FLOOR CONNECTION DETAIL

©ASKIN 2022

Revision		
-	-	-
-	-	-
-	-	-
-	-	-
-	-	-
-	-	-
-	-	-

Checked By: A SHANNON	Scale: 1:2
Drawn By: R VORWERK	Sheet size: A4
Issue date: 09.09.2022	Revision: -
Drawing No.	EXTVIVID - 303

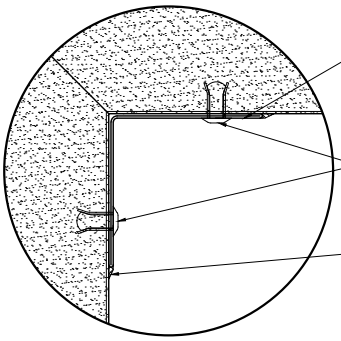

FLASHING
40 x 40 x 0.6
PRE-PAINTED
STEEL ANGLE

FIXING
PC SS 4mm RIVETS
AT 300 CTRS

OPTIONAL WATER SEAL
FOOD GRADE SEALANT
REQUIRED TO WASH
DOWN AREAS

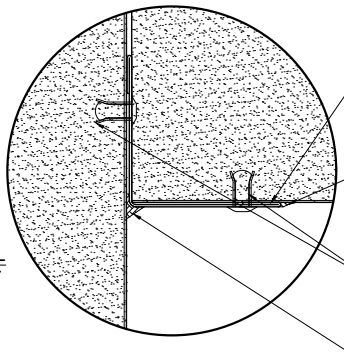

FLASHING
40 x 40 x 0.6
PRE-PAINTED
STEEL ANGLE

WATER SEAL
FOOD GRADE SEALANT
REQUIRED TO WASH
DOWN AREAS

FIXING
PC SS 4mm RIVETS
AT 300 CTRS

OPTIONAL WATER SEAL
FOOD GRADE SEALANT
REQUIRED TO WASH
DOWN AREAS

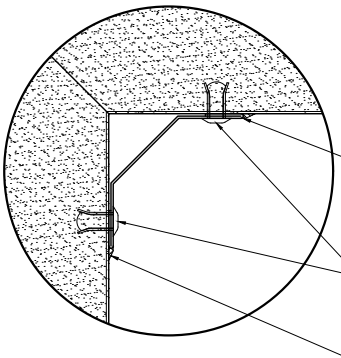

FLASHING
35 x 35 x 0.6
PRE-PAINTED STEEL
COVE ANGLE

FIXING
PC SS 4mm RIVETS
AT 300 CTRS

OPTIONAL WATER SEAL
FOOD GRADE SEALANT
REQUIRED TO WASH
DOWN AREAS

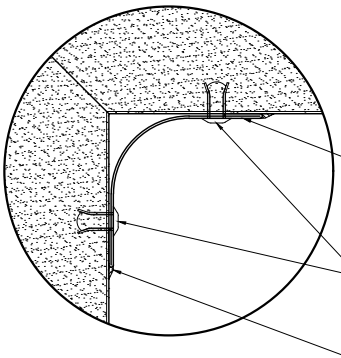

FLASHING
40 x 40 x 0.6
PRE-PAINTED
STEEL RADIUS

FIXING
PC SS 4mm RIVETS
AT 300 CTRS

OPTIONAL WATER SEAL
FOOD GRADE SEALANT
REQUIRED TO WASH
DOWN AREAS

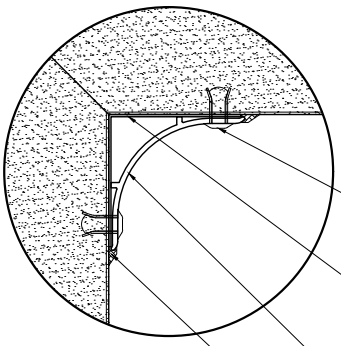

FIXING
PC SS 4mm RIVETS
AT 300 CTRS

FLASHING
35 x 35 x 0.6
PRE-PAINTED
STEEL ANGLE

EXTRUSION
35mm POWDER COATED
ALUMINIUM RADIUS

OPTIONAL WATER SEAL
FOOD GRADE SEALANT
REQUIRED TO WASH
DOWN AREAS

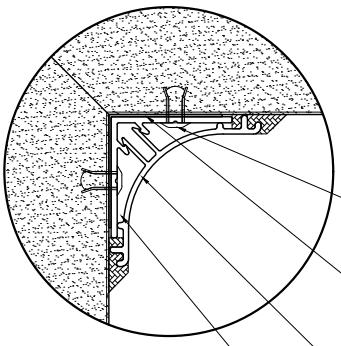

FIXING
PC SS 4mm RIVETS
AT 300 CTRS

FLASHING
30 x 30 x 0.6
PRE-PAINTED
STEEL ANGLE

EXTRUSION
POWDERCOATED
ALUMINIUM 2 PART
HIDDEN FIX RADIUS

OPTIONAL WATER SEAL
FOOD GRADE SEALANT
REQUIRED TO WASH
DOWN AREAS

ALTERNATIVE INTERNAL CORNICES - PLAN VIEW

SCALE 1:2

ASKIN Performance Panels

www.askin.net.au

VIC P : 03 8769 4816 WA P : 08 9249 4022
SA P : 08 8252 7188 QLD P : 07 3718 9500
NSW P : 02 8825 2598 NT P : 08 8252 7188

PROJECT:

EXTERIORS - VIVID

TRANSFORM PROFILE
VERTICAL WALL TO WALL
CONNECTION DETAILS

©ASKIN 2022

Revision		
-	-	-
-	-	-
-	-	-
-	-	-
-	-	-
-	-	-
-	-	-

Checked By: A SHANNON	Scale: 1:2
Drawn By: R VORWERK	Sheet size: A4
Issue date: 09.09.2022	Revision: -
Drawing No.	EXTVIVID - 310

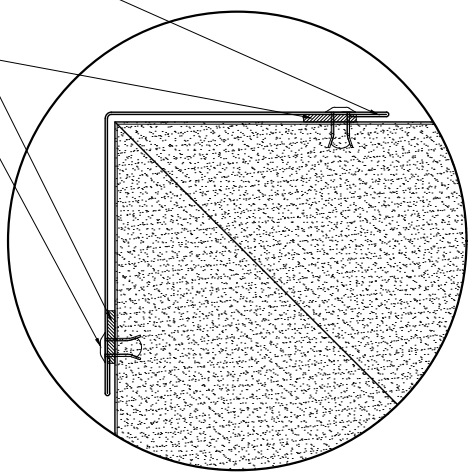

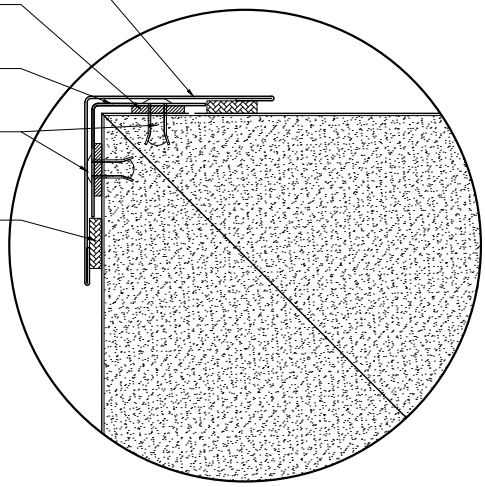

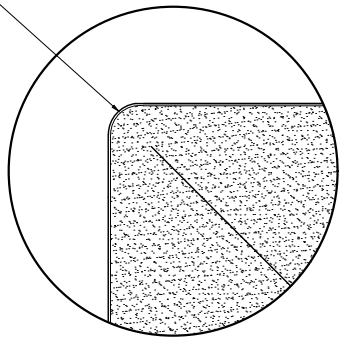

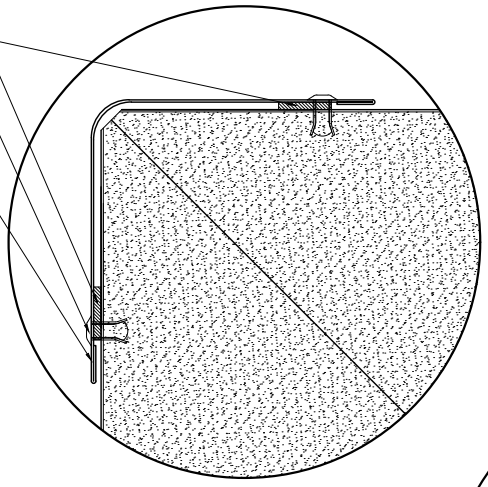

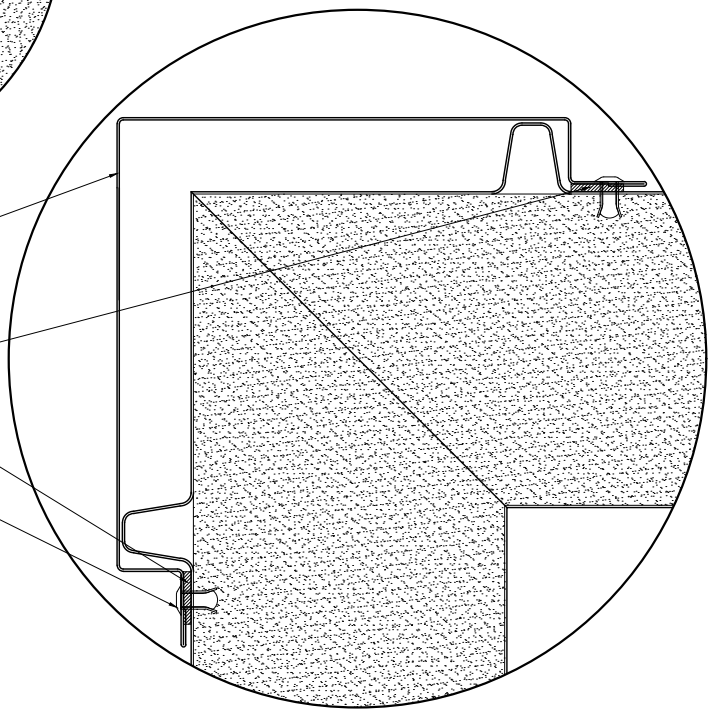

ALTERNATIVE EXTERNAL CORNER DETAILS - PLAN VIEW

SCALE 1:2

ASKIN Performance Panels

www.askin.net.au

VIC	P : 03 8769 4816	WA	P : 08 9249 4022
SA	P : 08 8252 7188	QLD	P : 07 3718 9500
NSW	P : 02 8825 2598	NT	P : 08 8252 7188

PROJECT:

EXTERIORS - VIVID

TRANSFORM PROFILE
VERTICAL WALL TO WALL
CONNECTION DETAILS

©ASKIN 2022

Revision

-	-	-
-	-	-
-	-	-
-	-	-
-	-	-
-	-	-
-	-	-

Checked By: A SHANNON	Scale: 1:2
Drawn By: R VORWERK	Sheet size: A4
Issue date: 09.09.2022	Revision: -
Drawing No.	EXTVIVID - 311

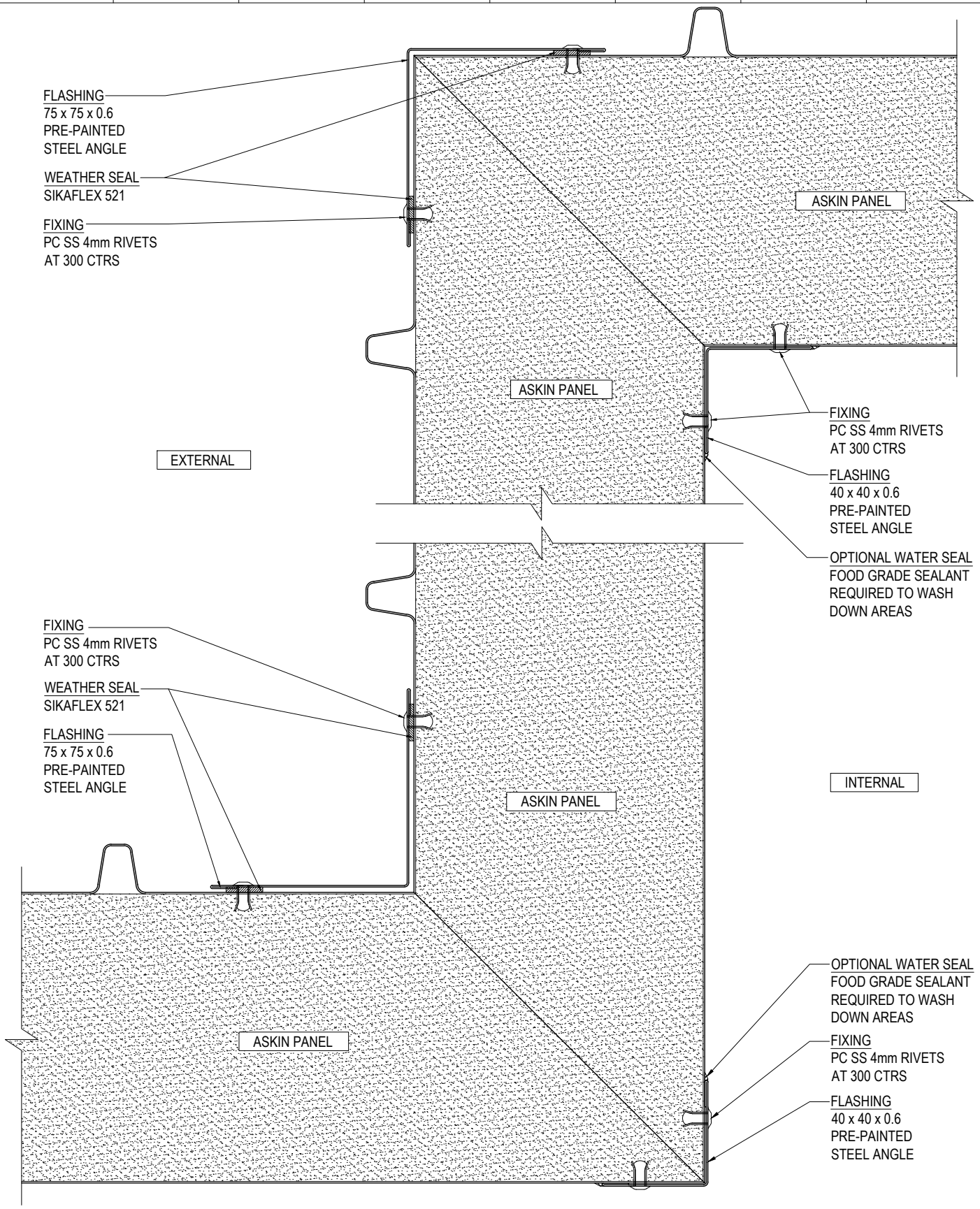

WALL TO WALL CONNECTION
DETAIL - PLAN VIEW
SCALE 1:2

ASKIN Performance Panels
www.askin.net.au
VIC P : 03 8769 4816 WA P : 08 9249 4022
SA P : 08 8252 7188 QLD P : 07 3718 9500
NSW P : 02 8825 2598 NT P : 08 8252 7188

PROJECT:
EXTERIORS - VIVID
TRANSFORM PROFILE
VERTICAL WALL TO WALL
CONNECTION DETAILS

©ASKIN 2022

Revision		
-	-	-
-	-	-
-	-	-
-	-	-
-	-	-
-	-	-
-	-	-

Checked By: A SHANNON	Scale: 1:2
Drawn By: R VORWERK	Sheet size: A4
Issue date: 09.09.2022	Revision: -
Drawing No.	EXTVIVID - 312

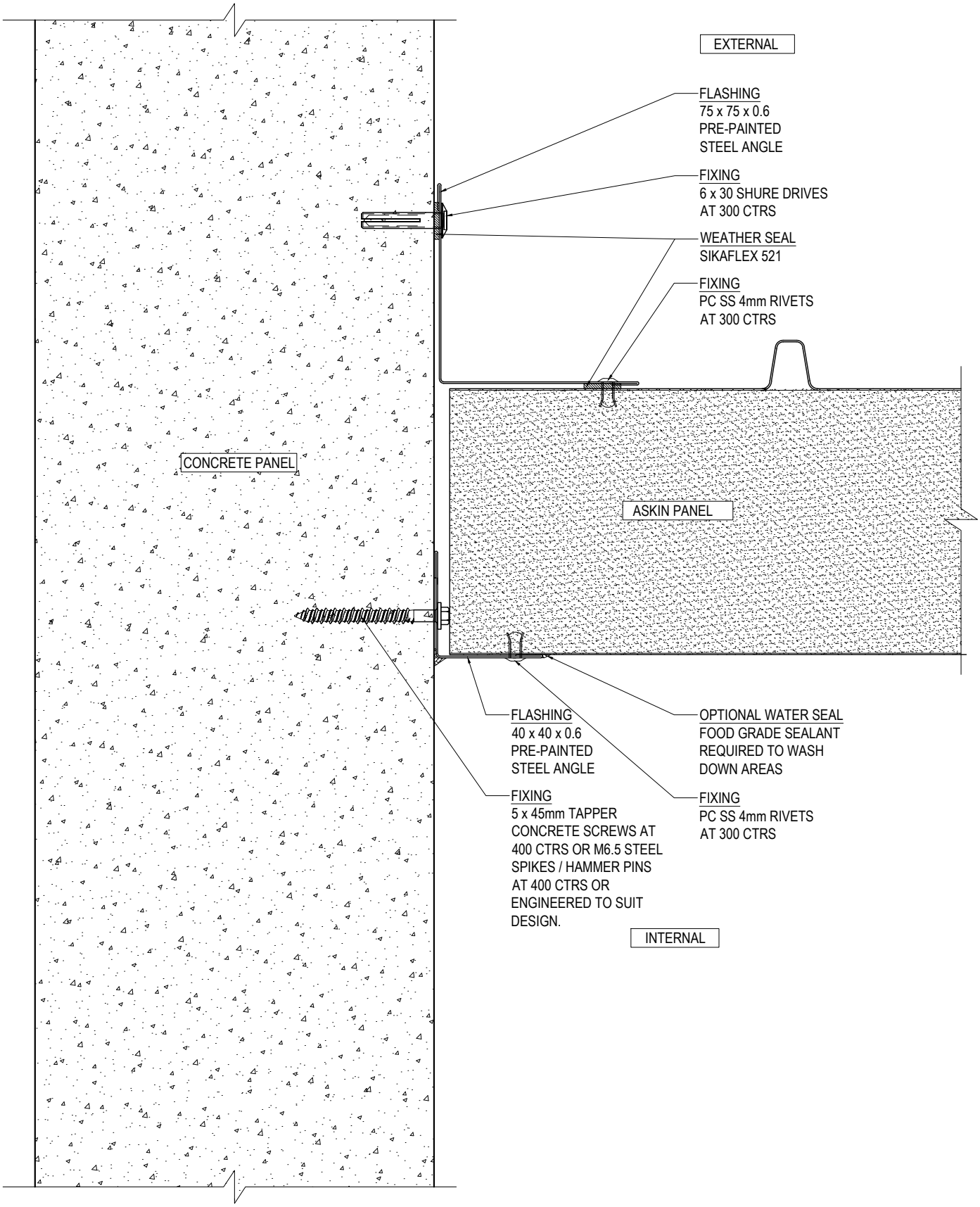

WALL TO WALL CONNECTION DETAIL - PLAN VIEW

SCALE 1:2

ASKIN Performance Panels

www.askin.net.au

VIC	P : 03 8769 4816	WA	P : 08 9249 4022
SA	P : 08 8252 7188	QLD	P : 07 3718 9500
NSW	P : 02 8825 2598	NT	P : 08 8252 7188

PROJECT:

EXTERIORS - VIVID

TRANSFORM PROFILE
VERTICAL WALL TO WALL
CONNECTION DETAILS

©ASKIN 2022

Revision

-	-	-
-	-	-
-	-	-
-	-	-
-	-	-
-	-	-
-	-	-

Checked By: A SHANNON	Scale: 1:2
Drawn By: R VORWERK	Sheet size: A4
Issue date: 09.09.2022	Revision: -
Drawing No.	EXTVIVID - 313

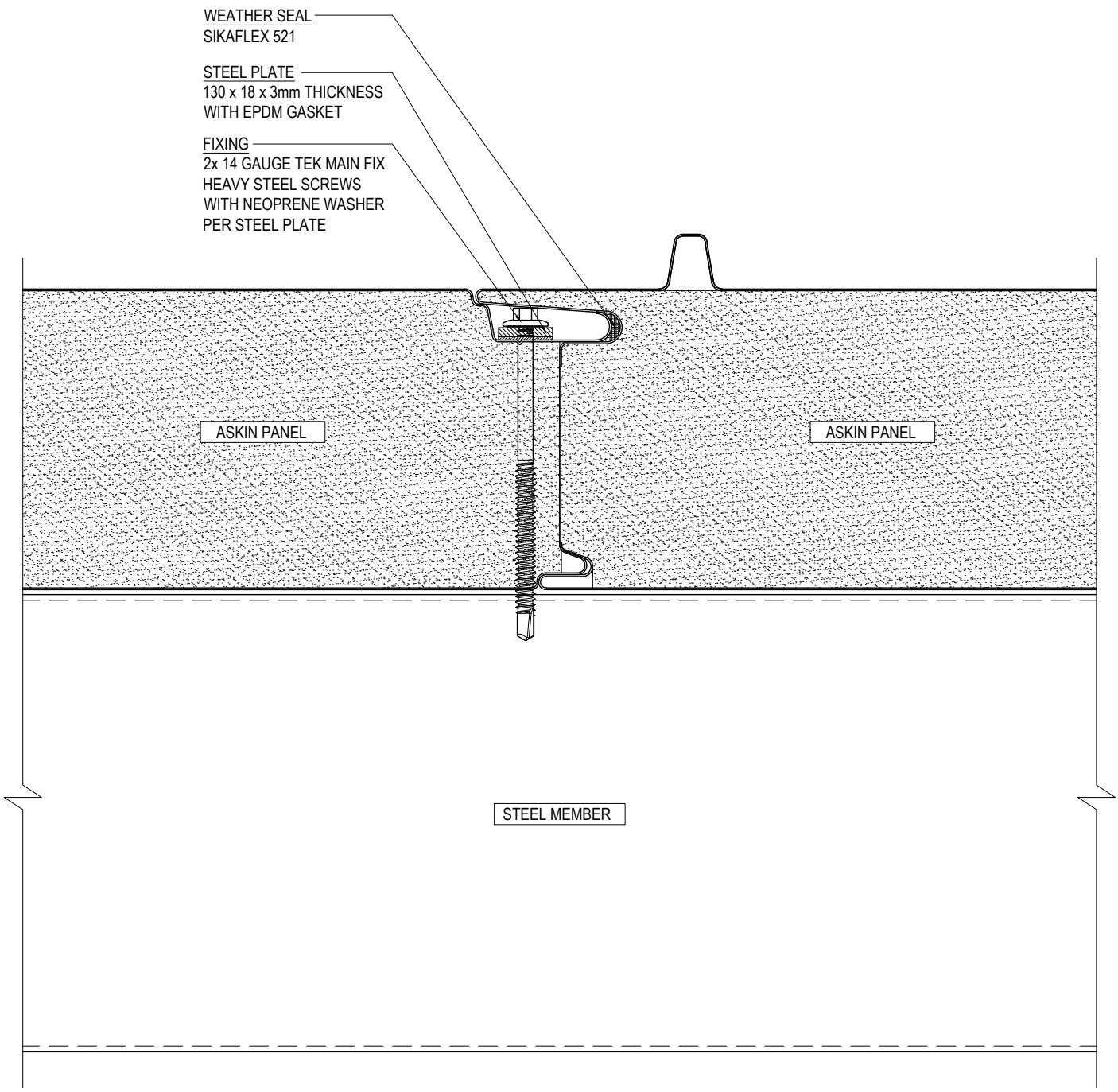

WALL TO WALL CONNECTION
DETAIL - PLAN VIEW
SCALE 1:2

ASKIN Performance Panels
www.askin.net.au
VIC P : 03 8769 4816 WA P : 08 9249 4022
SA P : 08 8252 7188 QLD P : 07 3718 9500
NSW P : 02 8825 2598 NT P : 08 8252 7188

PROJECT:
EXTERIORS - VIVID
TRANSFORM PROFILE
VERTICAL WALL TO WALL
CONNECTION DETAILS

©ASKIN 2022

Revision		
-	-	-
-	-	-
-	-	-
-	-	-
-	-	-
-	-	-
-	-	-

Checked By: A SHANNON	Scale: 1:2
Drawn By: R VORWERK	Sheet size: A4
Issue date: 09.09.2022	Revision: -
Drawing No.	EXTVIVID - 314

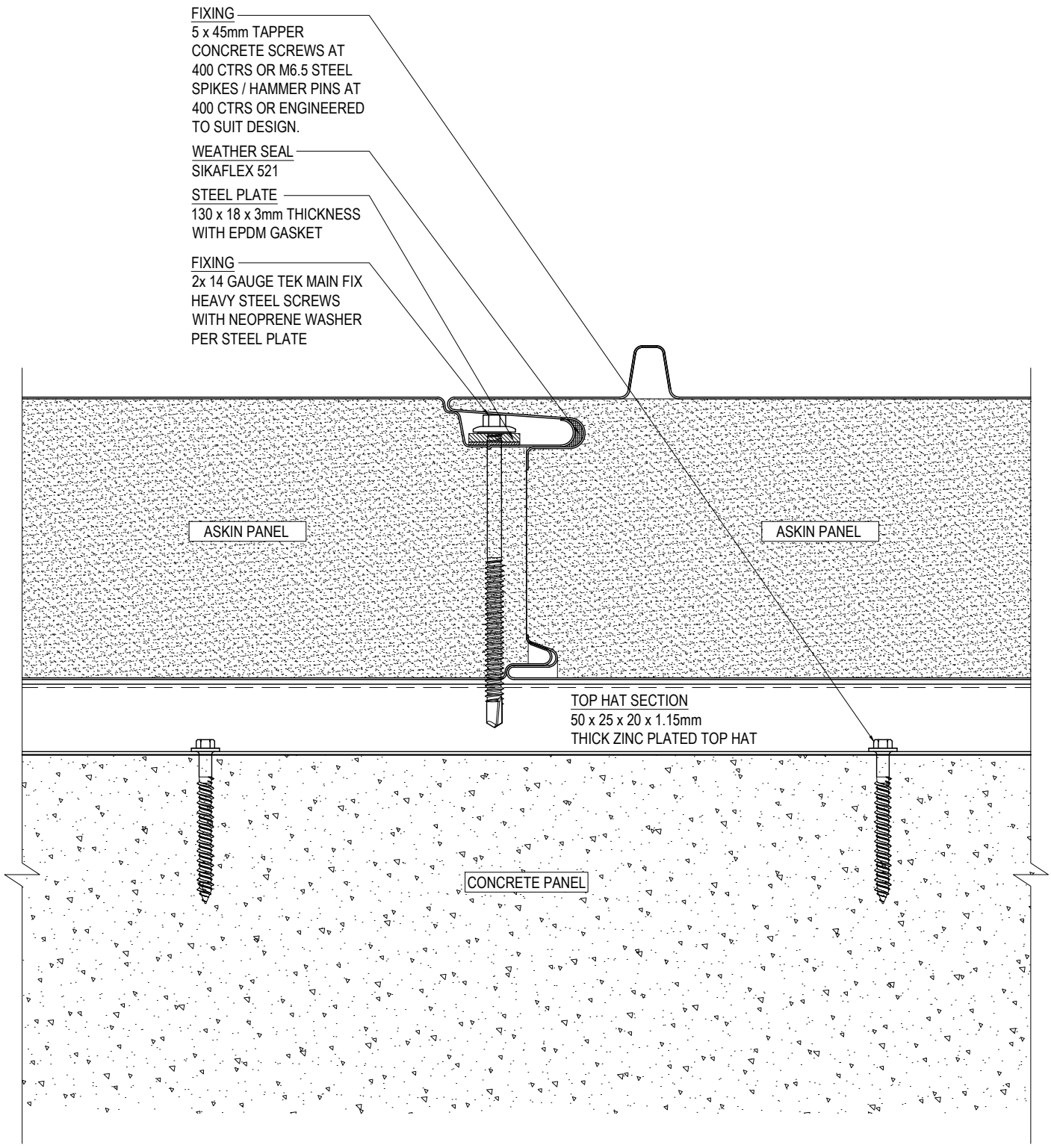

WALL TO WALL CONNECTION
DETAIL - PLAN VIEW
SCALE 1:2

ASKIN Performance Panels

www.askin.net.au

VIC	P : 03 8769 4816	WA	P : 08 9249 4022
SA	P : 08 8252 7188	QLD	P : 07 3718 9500
NSW	P : 02 8825 2598	NT	P : 08 8252 7188

PROJECT:

EXTERIORS - VIVID

TRANSFORM PROFILE
VERTICAL WALL TO WALL
CONNECTION DETAILS

©ASKIN 2022

Revision

-	-	-
-	-	-
-	-	-
-	-	-
-	-	-
-	-	-
-	-	-

Checked By: A SHANNON	Scale: 1:2
Drawn By: R VORWERK	Sheet size: A4
Issue date: 09.09.2022	Revision: -
Drawing No.	EXTVIVID - 315

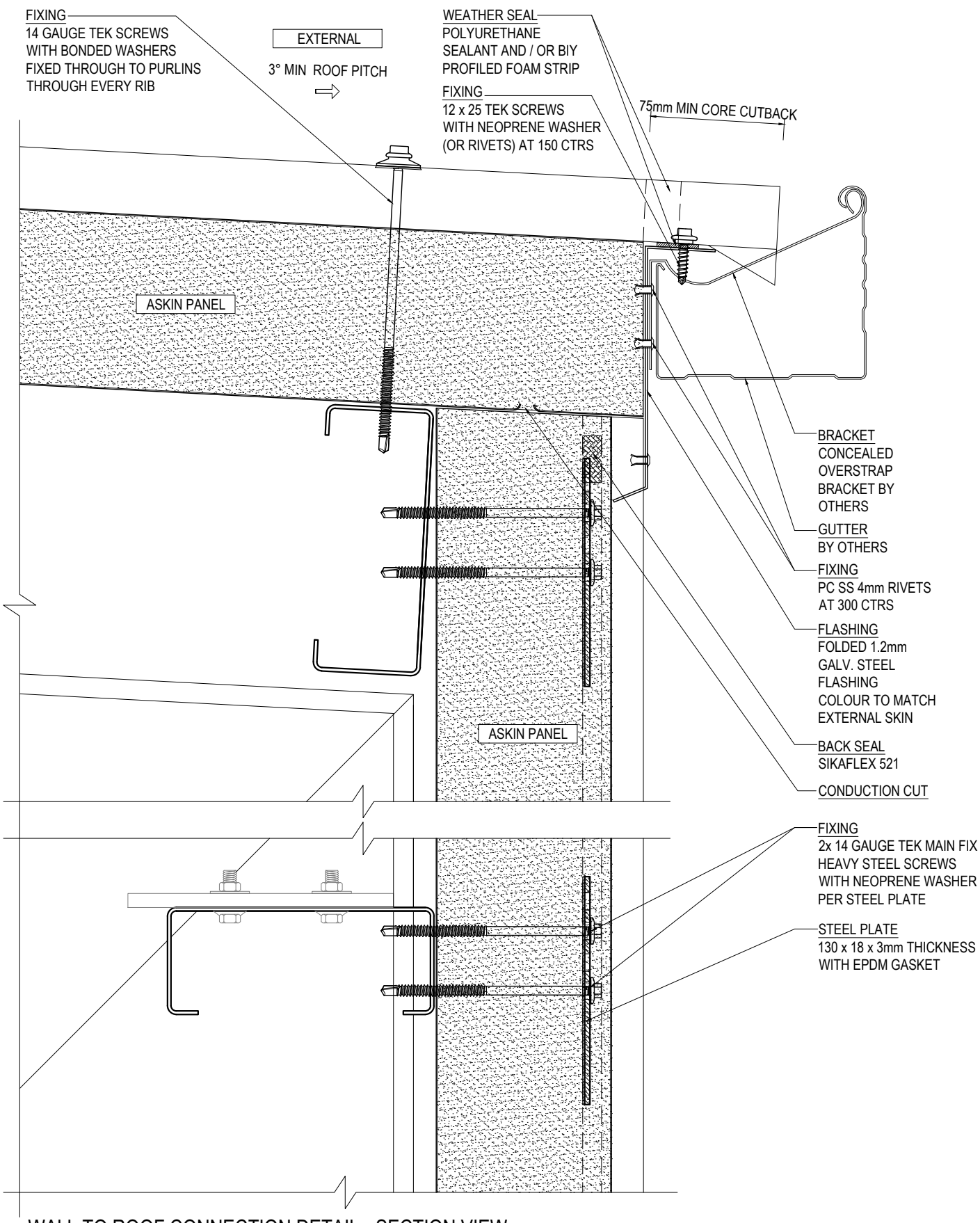

WALL TO ROOF CONNECTION DETAIL - SECTION VIEW

SCALE 1:3

ASKIN Performance Panels
www.askin.net.au
VIC P : 03 8769 4816 WA P : 08 9249 4022
SA P : 08 8252 7188 QLD P : 07 3718 9500
NSW P : 02 8825 2598 NT P : 08 8252 7188

PROJECT:

EXTERIORS - VIVID

TRANSFORM PROFILE
VERTICAL ROOFING &
PARAPET CONNECTIONS

©ASKIN 2022

Revision		
-	-	-
-	-	-
-	-	-
-	-	-
-	-	-
-	-	-
-	-	-

Checked By: A SHANNON	Scale: 1:3
Drawn By: R VORWERK	Sheet size: A4
Issue date: 09.09.2022	Revision: -
Drawing No.	EXTVIVID - 320

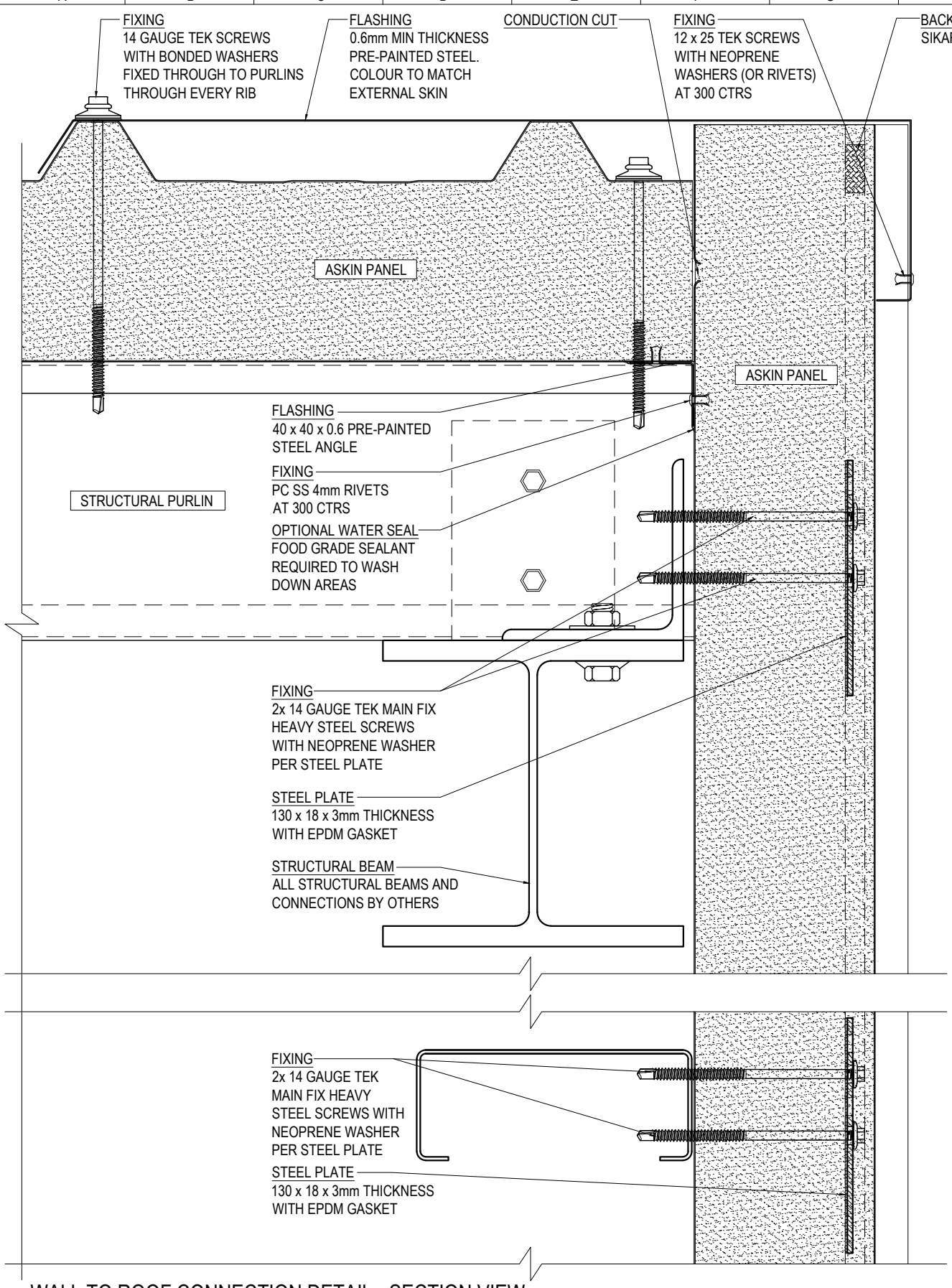

WALL TO ROOF CONNECTION DETAIL - SECTION VIEW

SCALE 1:3

ASKIN Performance Panels

www.askin.net.au

VIC	P : 03 8769 4816	WA	P : 08 9249 4022
SA	P : 08 8252 7188	QLD	P : 07 3718 9500
NSW	P : 02 8825 2598	NT	P : 08 8252 7188

PROJECT:

EXTERIORS - VIVID

TRANSFORM PROFILE
VERTICAL ROOFING &
PARAPET CONNECTIONS

©ASKIN 2022

Revision

-	-	-
-	-	-
-	-	-
-	-	-
-	-	-
-	-	-
-	-	-

Checked By: A SHANNON	Scale: 1:3
Drawn By: R VORWERK	Sheet size: A4
Issue date: 09.09.2022	Revision: -
Drawing No.	EXTVIVID - 321

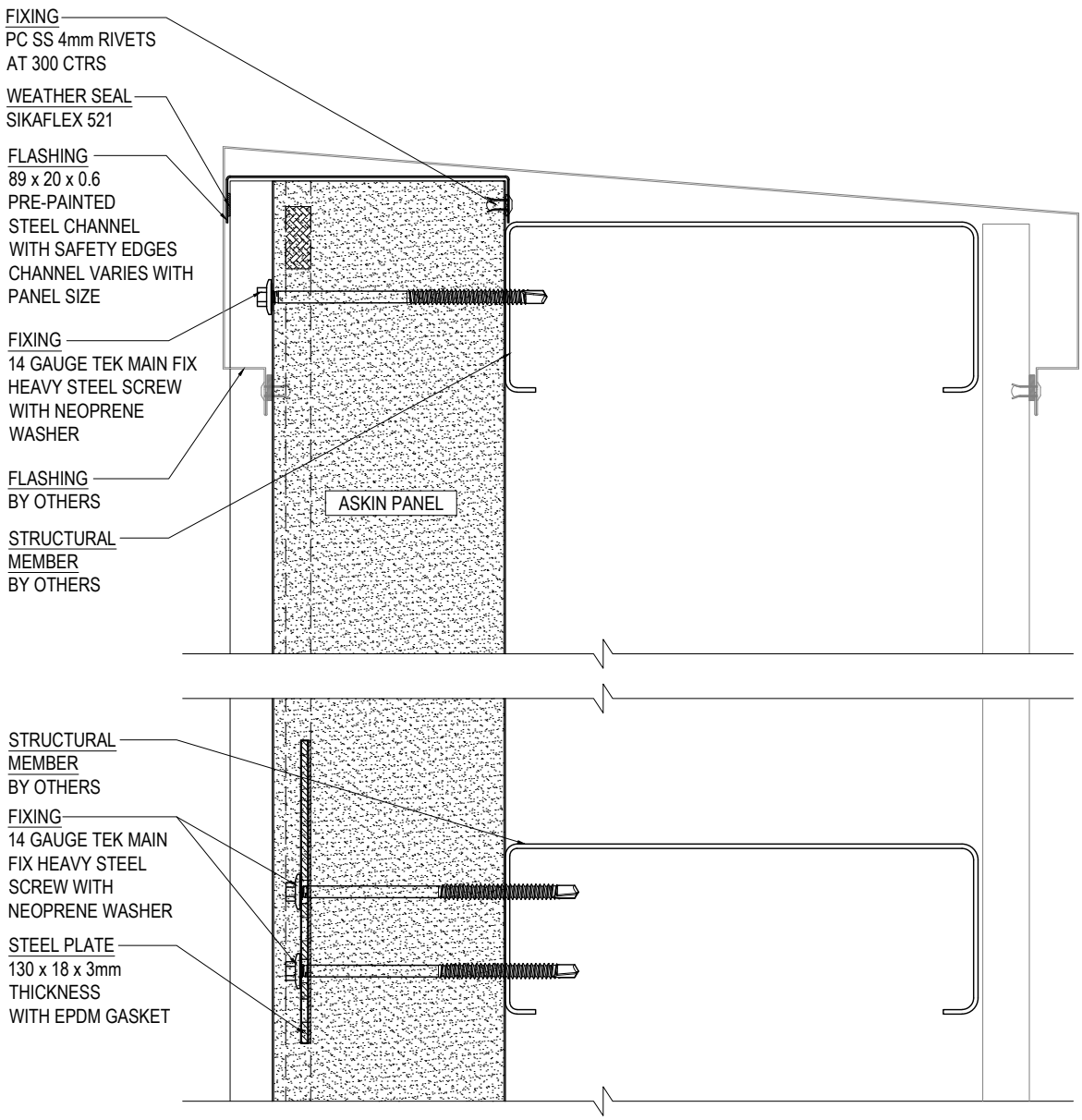

WALL TO PARAPET CONNECTION DETAIL - SECTION VIEW

SCALE 1:3

ASKIN Performance Panels
www.askin.net.au
VIC P : 03 8769 4816 WA P : 08 9249 4022
SA P : 08 8252 7188 QLD P : 07 3718 9500
NSW P : 02 8825 2598 NT P : 08 8252 7188

PROJECT:

EXTERIORS - VIVID

TRANSFORM PROFILE
VERTICAL ROOFING &
PARAPET CONNECTIONS

©ASKIN 2022

Revision

-	-	-
-	-	-
-	-	-
-	-	-
-	-	-
-	-	-
-	-	-

Checked By: A SHANNON	Scale: 1:3
Drawn By: R VORWERK	Sheet size: A4
Issue date: 09.09.2022	Revision: -
Drawing No.	EXTVIVID - 322

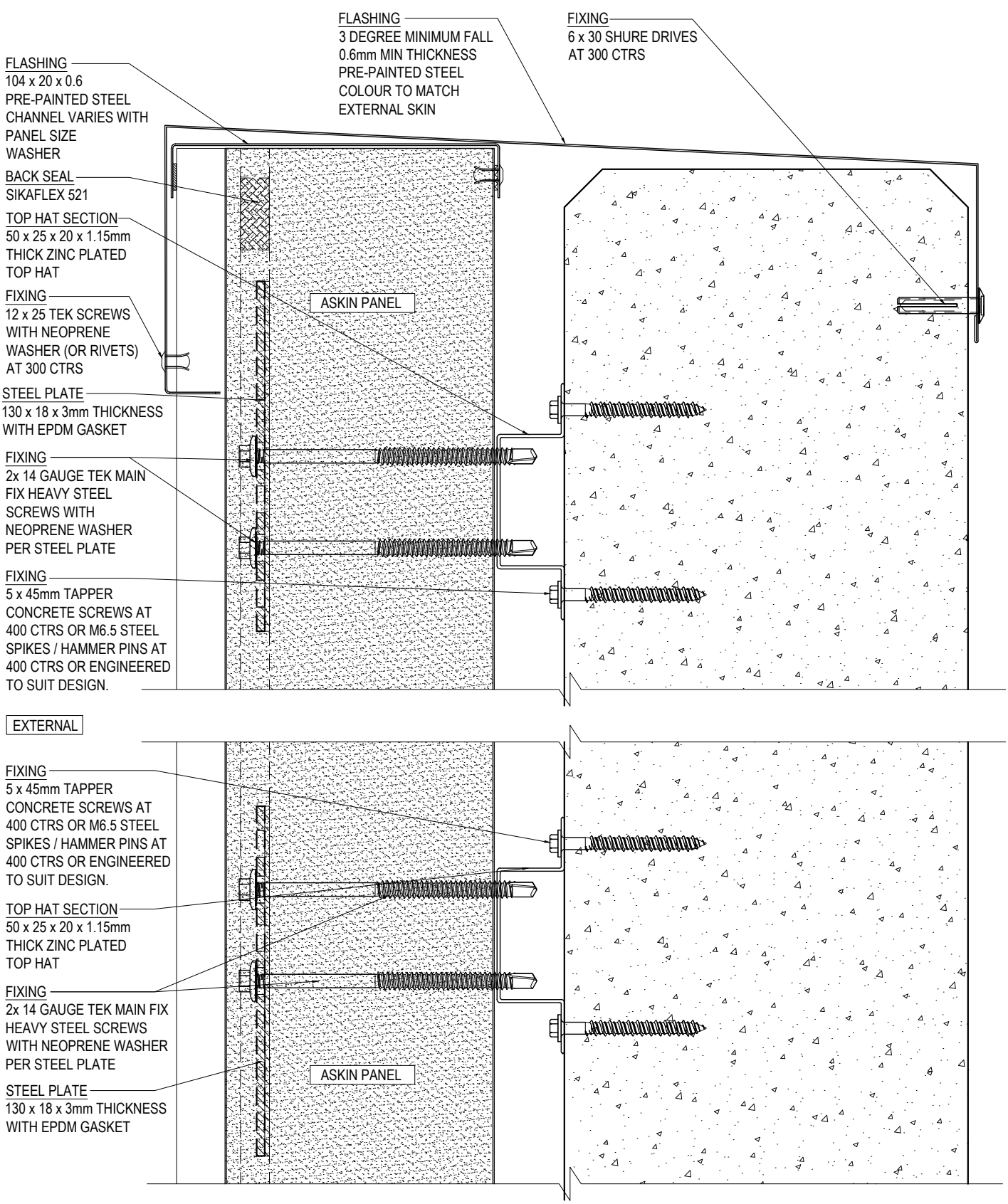

WALL TO ROOF CONNECTION DETAIL - SECTION VIEW

SCALE 1:2

ASKIN Performance Panels
www.askin.net.au
VIC P : 03 8769 4816 WA P : 08 9249 4022
SA P : 08 8252 7188 QLD P : 07 3718 9500
NSW P : 02 8825 2598 NT P : 08 8252 7188

PROJECT:

EXTERIORS - VIVID

TRANSFORM PROFILE
VERTICAL ROOFING &
PARAPET CONNECTIONS

©ASKIN 2022

Revision		
-	-	-
-	-	-
-	-	-
-	-	-
-	-	-
-	-	-
-	-	-

Checked By: A SHANNON	Scale: 1:2
Drawn By: R VORWERK	Sheet size: A4
Issue date: 09.09.2022	Revision: -
Drawing No.	EXTVIVID - 323

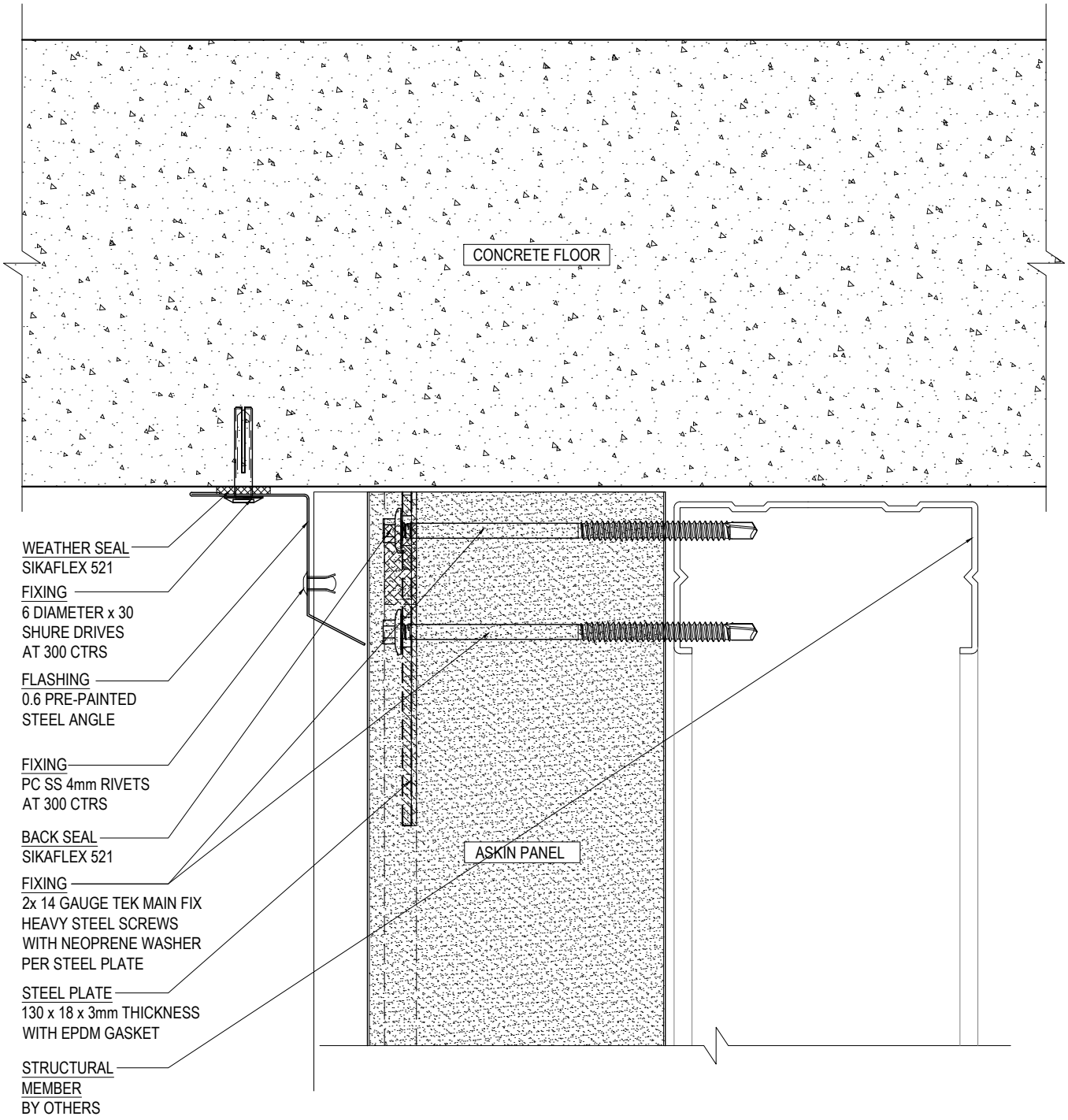

WALL TO CONCRETE SLAB CONNECTION DETAIL - SECTION VIEW

SCALE 1:2

ASKIN Performance Panels
www.askin.net.au
VIC P : 03 8769 4816 WA P : 08 9249 4022
SA P : 08 8252 7188 QLD P : 07 3718 9500
NSW P : 02 8825 2598 NT P : 08 8252 7188

PROJECT:

EXTERIORS - VIVID

TRANSFORM PROFILE
VERTICAL ROOFING &
PARAPET CONNECTIONS

©ASKIN 2022

Revision		
-	-	-
-	-	-
-	-	-
-	-	-
-	-	-
-	-	-
-	-	-

Checked By: A SHANNON	Scale: 1:2
Drawn By: R VORWERK	Sheet size: A4
Issue date: 09.09.2022	Revision: -
Drawing No.	EXTVIVID - 324

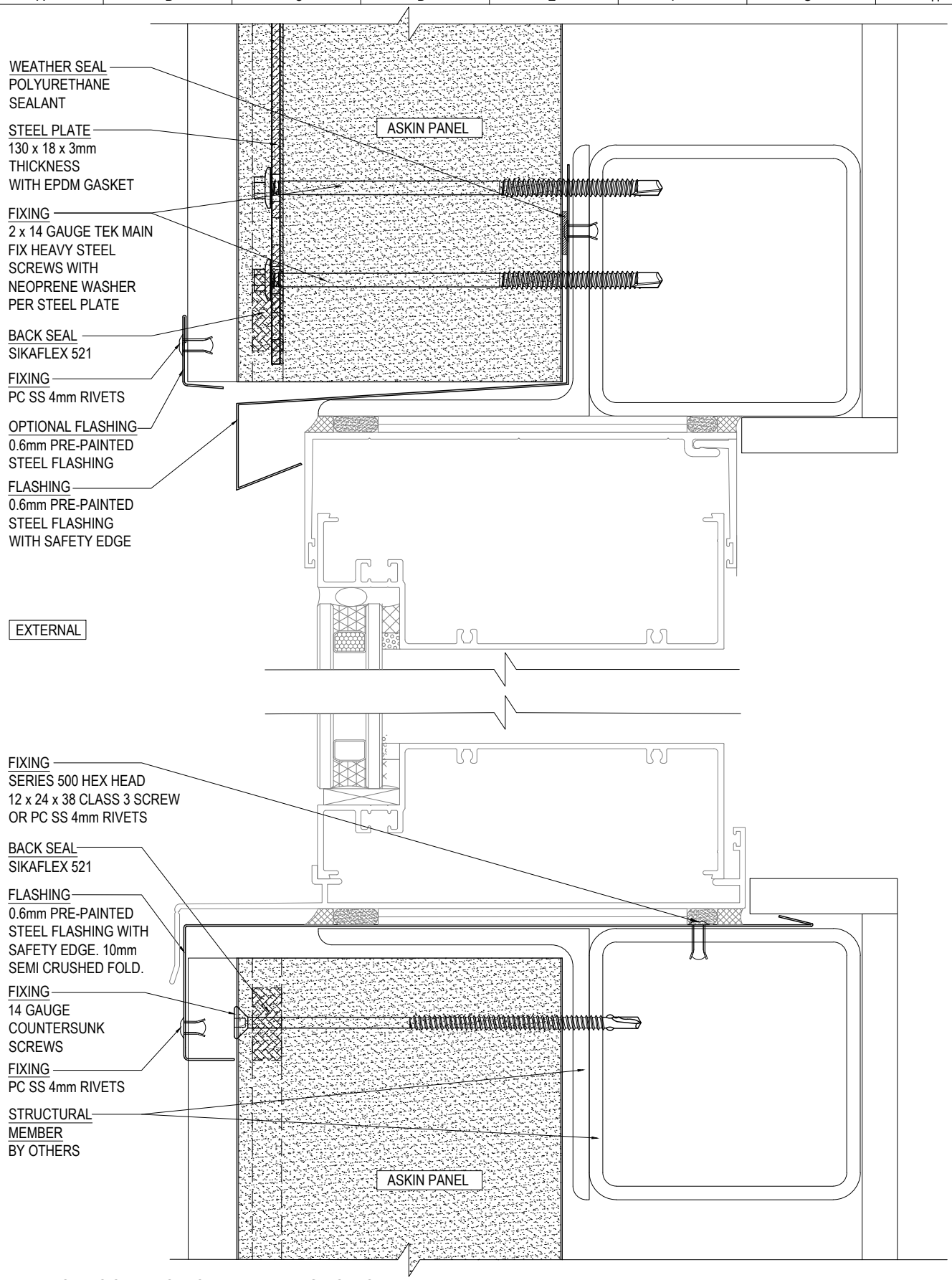

WINDOW CONNECTION DETAIL - SECTION VIEW

SCALE 1:2

ASKIN Performance Panels
www.askin.net.au
VIC P : 03 8769 4816 WA P : 08 9249 4022
SA P : 08 8252 7188 QLD P : 07 3718 9500
NSW P : 02 8825 2598 NT P : 08 8252 7188

PROJECT:

EXTERIORS - VIVID

TRANSFORM PROFILE
VERTICAL WINDOW
CONNECTION DETAILS

©ASKIN 2022

Revision		
-	-	-
-	-	-
-	-	-
-	-	-
-	-	-
-	-	-
-	-	-

Checked By: A SHANNON	Scale: 1:2
Drawn By: R VORWERK	Sheet size: A4
Issue date: 09.09.2022	Revision: -
Drawing No.	EXTVIVID - 330

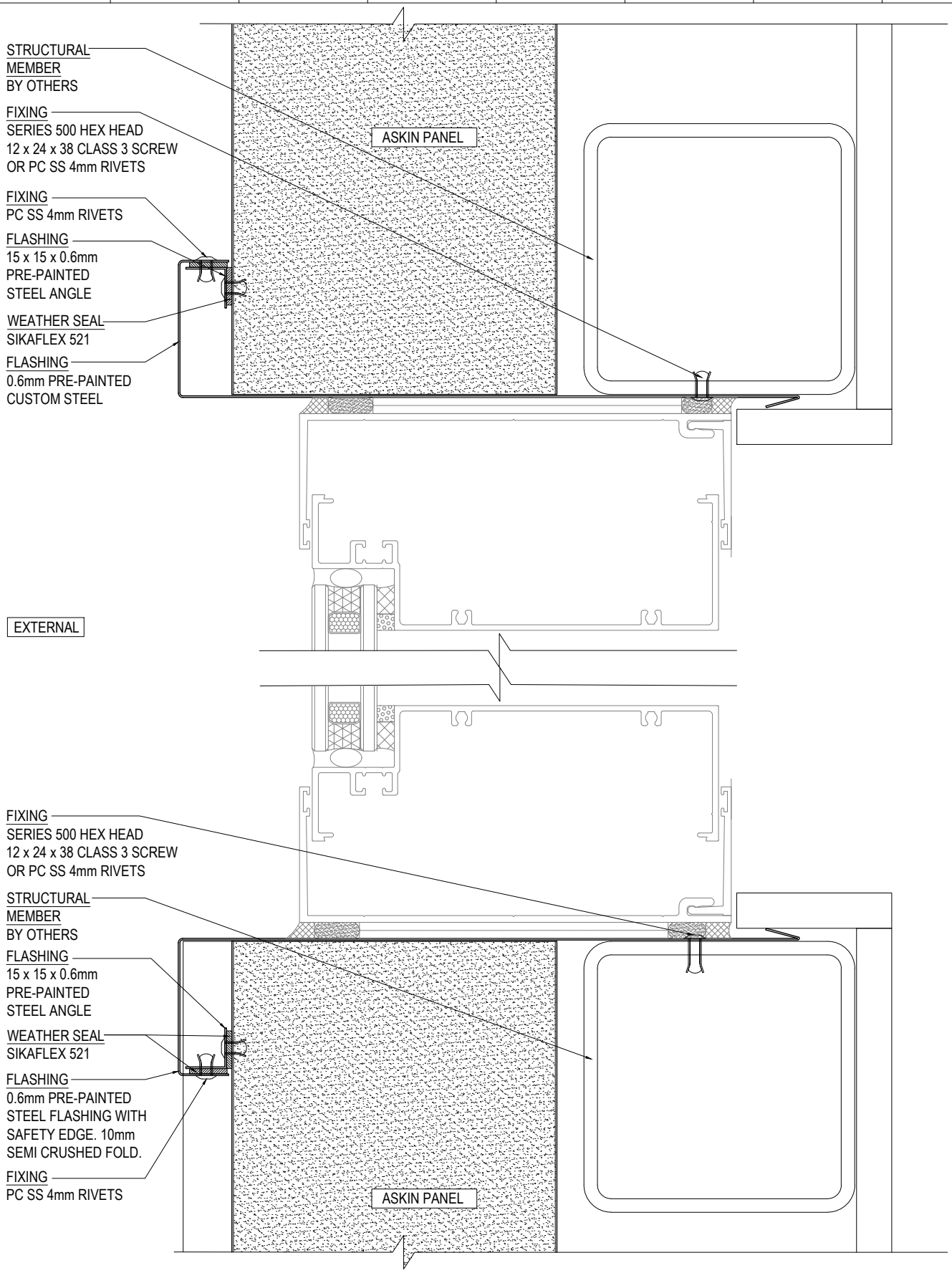

WINDOW CONNECTION DETAIL - PLAN VIEW

SCALE 1:2

ASKIN Performance Panels

www.askin.net.au

VIC P : 03 8769 4816 WA P : 08 9249 4022
SA P : 08 8252 7188 QLD P : 07 3718 9500
NSW P : 02 8825 2598 NT P : 08 8252 7188

PROJECT:

EXTERIORS - VIVID

TRANSFORM PROFILE
VERTICAL WINDOW
CONNECTION DETAILS

©ASKIN 2022

Revision		
-	-	-
-	-	-
-	-	-
-	-	-
-	-	-
-	-	-
-	-	-

Checked By: A SHANNON	Scale: 1:2
Drawn By: R VORWERK	Sheet size: A4
Issue date: 09.09.2022	Revision: -
Drawing No.	EXTVIVID - 331

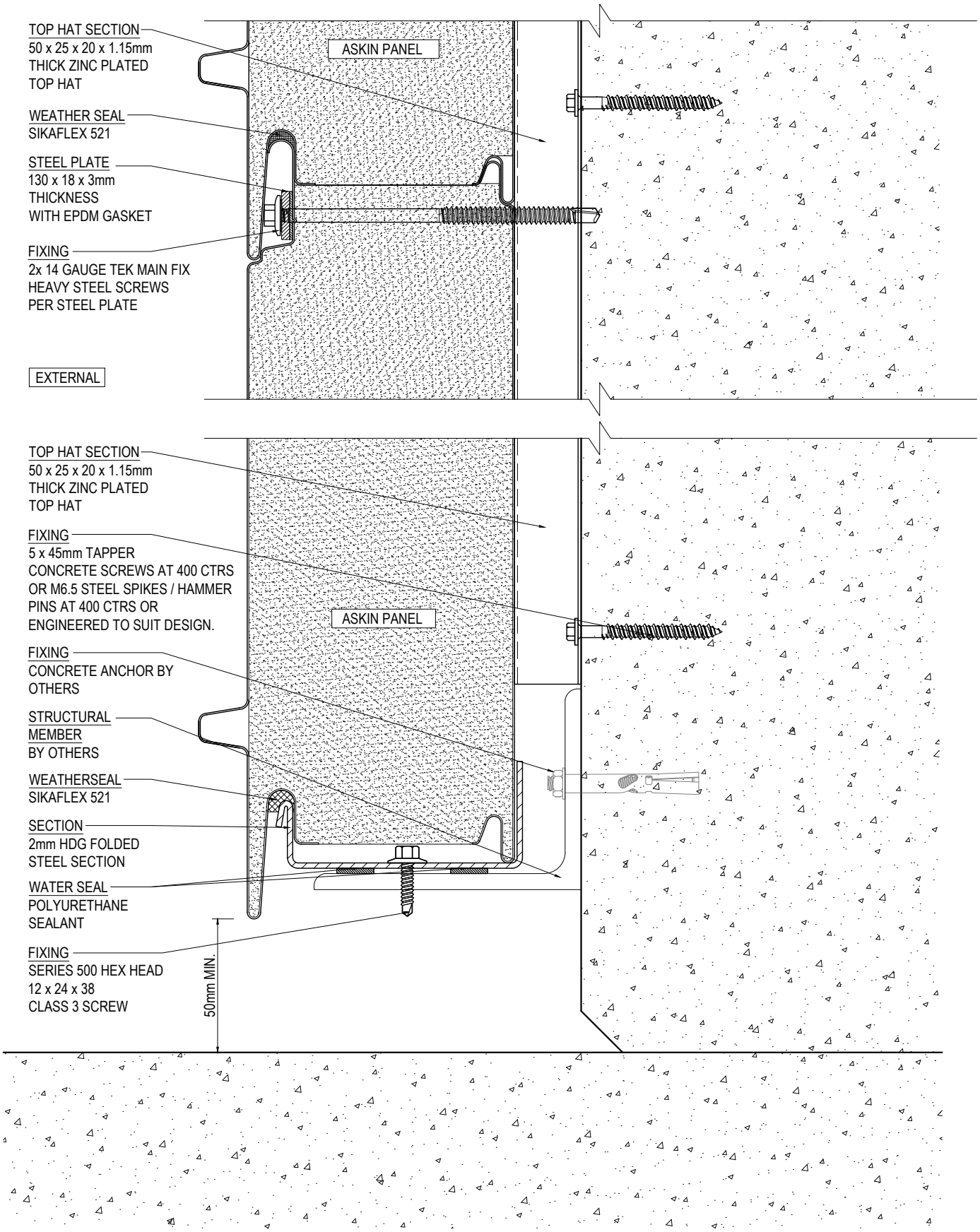

WALL TO CONCRETE WALL CONNECTION DETAIL - SECTION VIEW

SCALE 1:2

ASKIN Performance Panels
www.askin.net.au
VIC P : 03 8769 4816 WA P : 08 9249 4022
SA P : 08 8252 7188 QLD P : 07 3718 9500
NSW P : 02 8825 2598 NT P : 08 8252 7188

PROJECT:

EXTERIORS - VIVID

TRANSFORM PROFILE
HORIZONTAL WALL TO
FLOOR CONNECTION DETAIL

©ASKIN 2022

Revision		
-	-	-
-	-	-
-	-	-
-	-	-
-	-	-
-	-	-
-	-	-

Checked By: A SHANNON	Scale: 1:2
Drawn By: R VORWERK	Sheet size: A4
Issue date: 09.09.2022	Revision: -
Drawing No.	EXTVIVID - 400

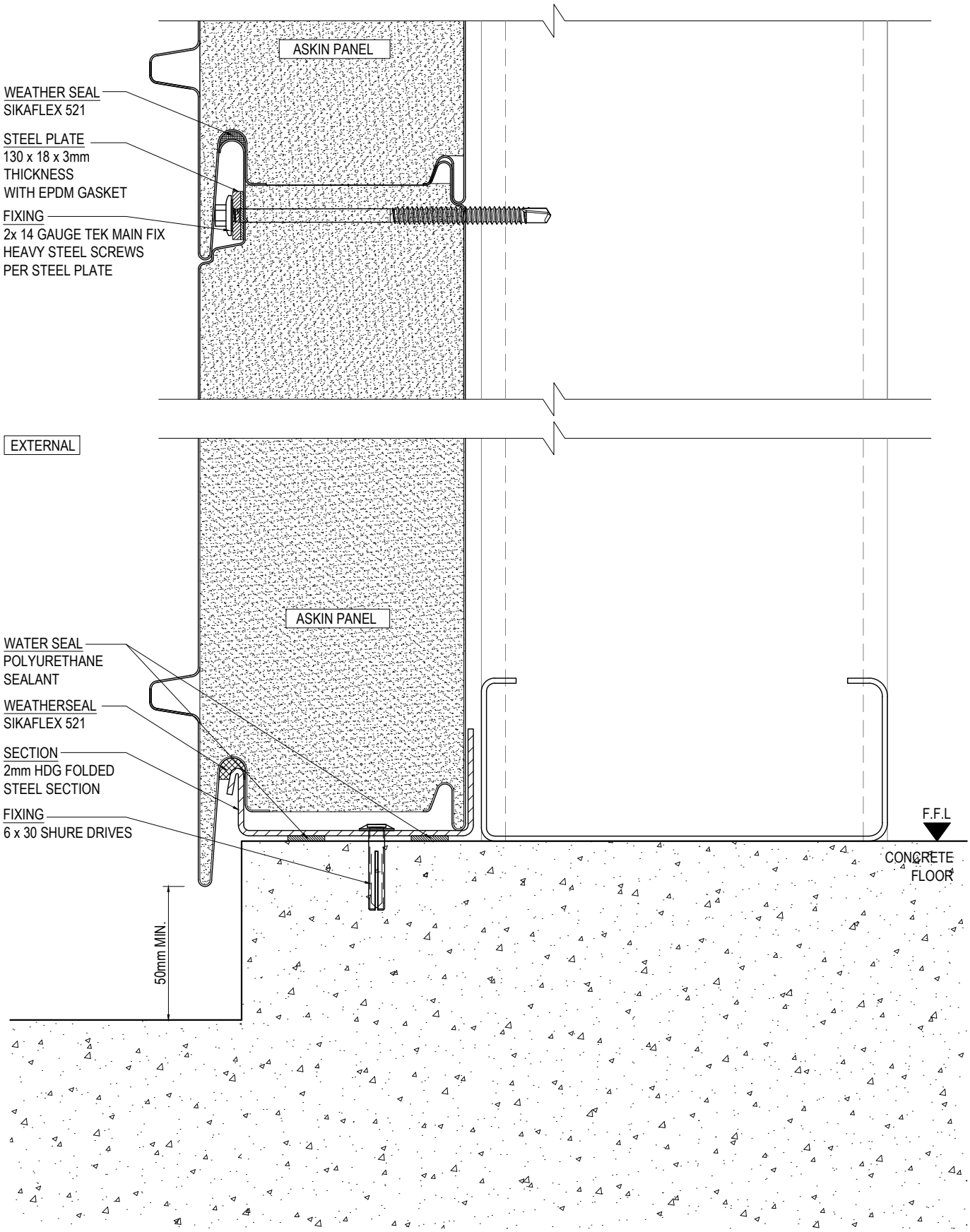

WALL TO STRUCTURAL FRAME CONNECTION DETAIL - SECTION VIEW

SCALE 1:2

ASKIN Performance Panels

www.askin.net.au

VIC	P : 03 8769 4816	WA	P : 08 9249 4022
SA	P : 08 8252 7188	QLD	P : 07 3718 9500
NSW	P : 02 8825 2598	NT	P : 08 8252 7188

PROJECT:

EXTERIORS - VIVID

TRANSFORM PROFILE
HORIZONTAL WALL TO
FLOOR CONNECTION DETAIL

©ASKIN 2022

Revision		
-	-	-
-	-	-
-	-	-
-	-	-
-	-	-
-	-	-
-	-	-

Checked By: A SHANNON	Scale: 1:2
Drawn By: R VORWERK	Sheet size: A4
Issue date: 09.09.2022	Revision: -
Drawing No.	EXTVIVID - 401

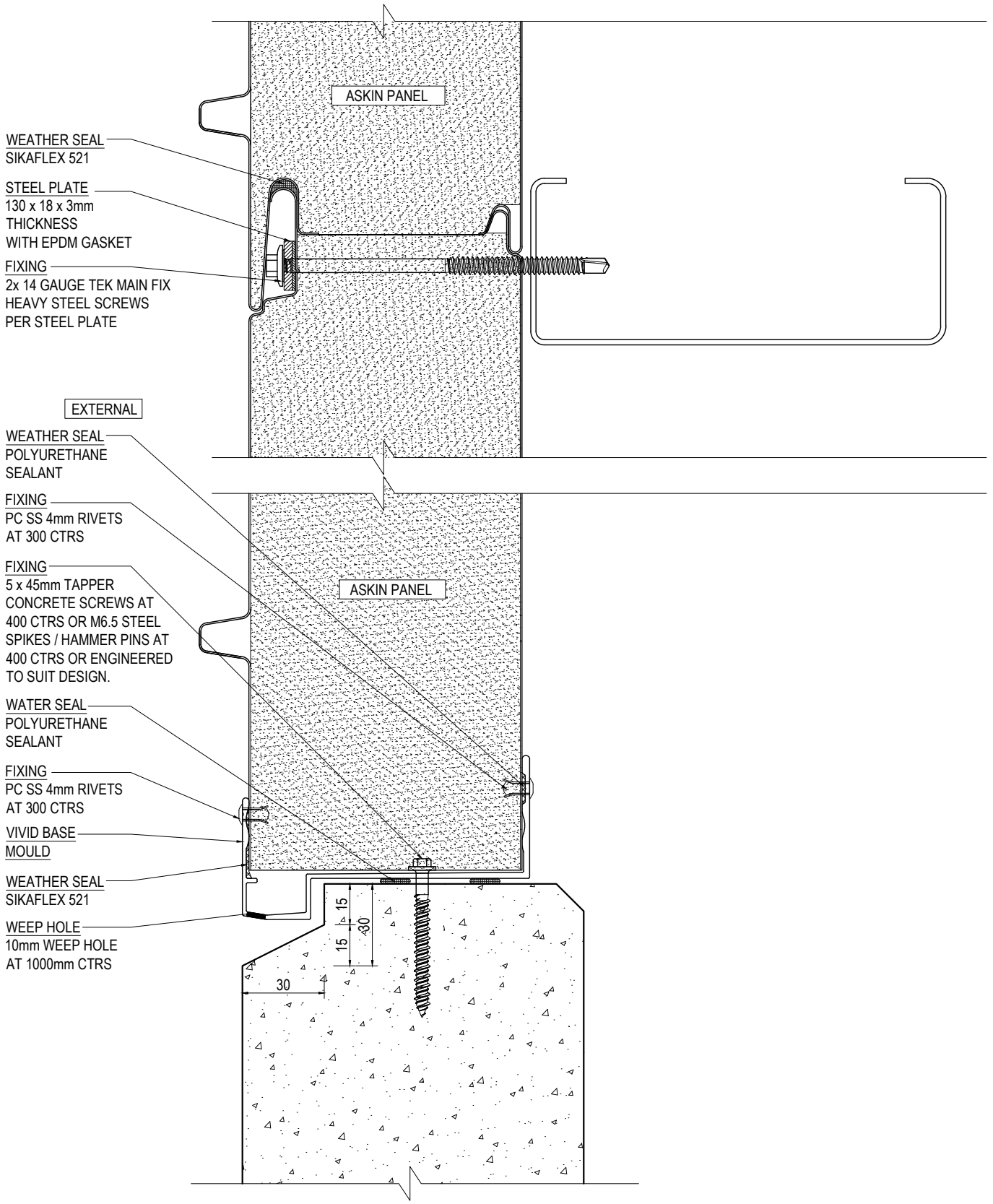

WALL TO CONCRETE PLINTH CONNECTION DETAIL - SECTION VIEW

SCALE 1:2

ASKIN Performance Panels

www.askin.net.au

VIC P : 03 8769 4816 WA P : 08 9249 4022
SA P : 08 8252 7188 QLD P : 07 3718 9500
NSW P : 02 8825 2598 NT P : 08 8252 7188

PROJECT:

EXTERIORS - VIVID

TRANSFORM PROFILE
HORIZONTAL WALL TO
FLOOR CONNECTION DETAIL

©ASKIN 2022

Revision		
-	-	-
-	-	-
-	-	-
-	-	-
-	-	-
-	-	-
-	-	-

Checked By: A SHANNON	Scale: 1:2
Drawn By: R VORWERK	Sheet size: A4
Issue date: 09.09.2022	Revision: -
Drawing No.	EXTVIVID - 402

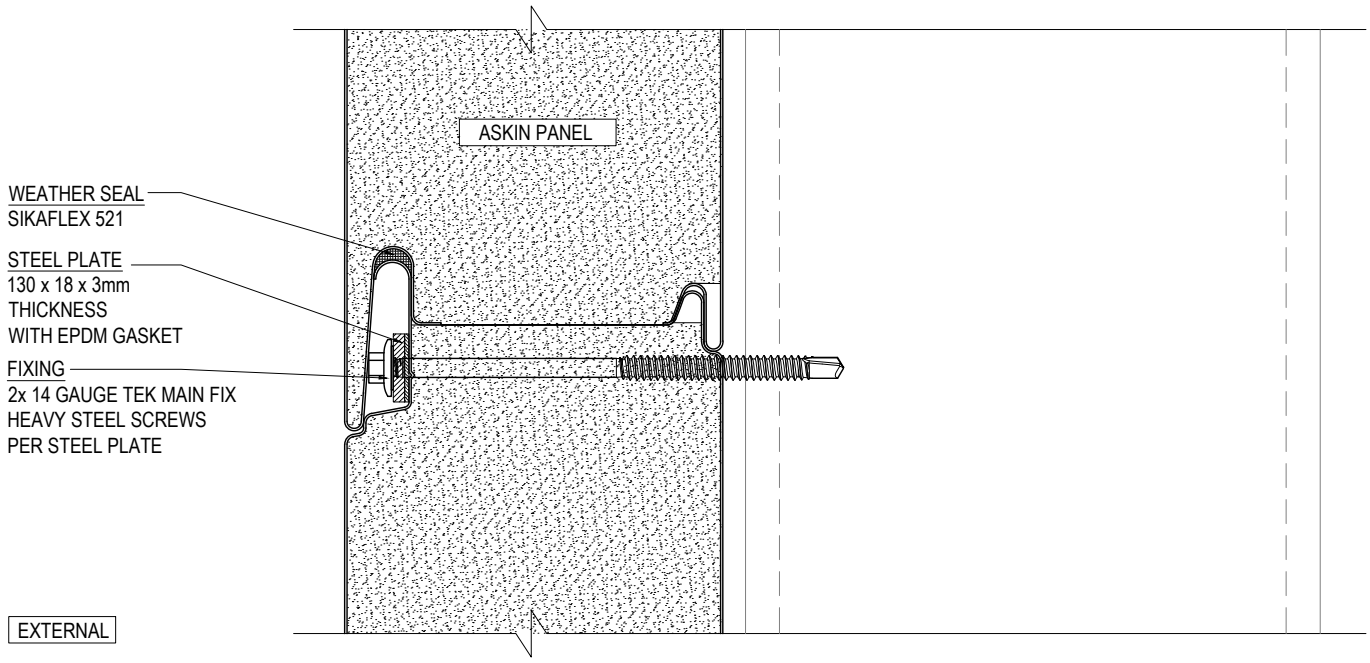

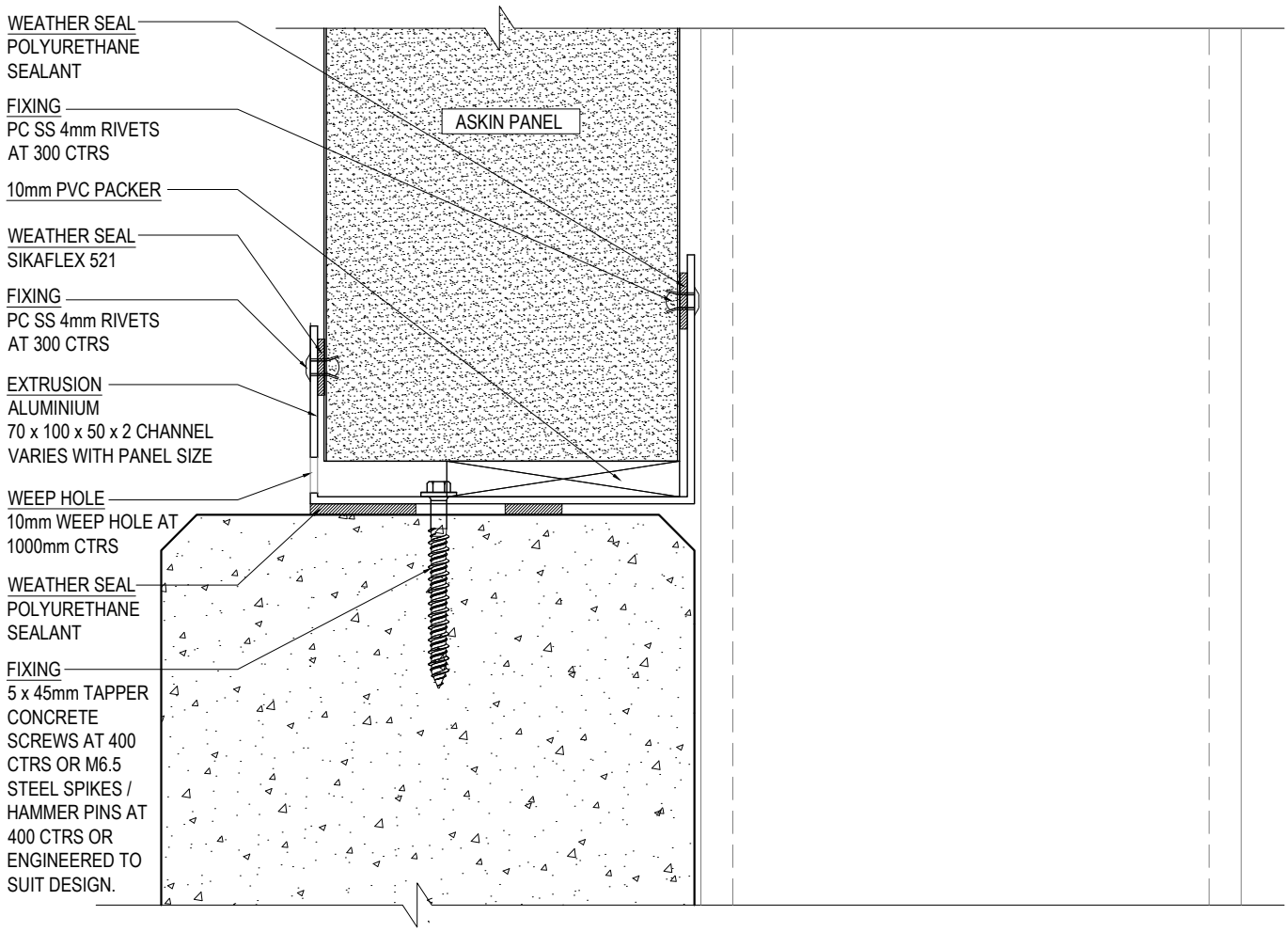

WALL TO CONCRETE PLINTH CONNECTION DETAIL - SECTION VIEW

SCALE 1:2

ASKIN Performance Panels
www.askin.net.au
VIC P : 03 8769 4816 WA P : 08 9249 4022
SA P : 08 8252 7188 QLD P : 07 3718 9500
NSW P : 02 8825 2598 NT P : 08 8252 7188

PROJECT:

EXTERIORS - VIVID

TRANSFORM PROFILE
HORIZONTAL WALL TO
FLOOR CONNECTION DETAIL

Revision

-	-	-
-	-	-
-	-	-
-	-	-
-	-	-
-	-	-
-	-	-

Checked By: A SHANNON	Scale: 1:2
Drawn By: R VORWERK	Sheet size: A4
Issue date: 09.09.2022	Revision: -
Drawing No.	EXTVIVID - 403

©ASKIN 2022

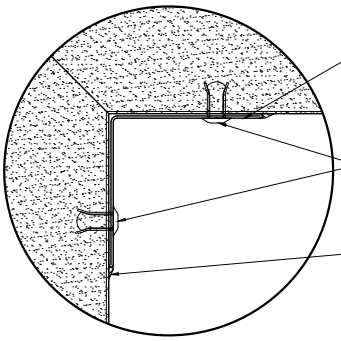

FLASHING
40 x 40 x 0.6
PRE-PAINTED
STEEL ANGLE

FIXING
PC SS 4mm RIVETS
AT 300 CTRS

OPTIONAL WATER SEAL
FOOD GRADE SEALANT
REQUIRED TO WASH
DOWN AREAS

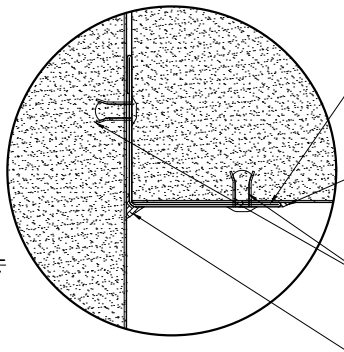

FLASHING
40 x 40 x 0.6
PRE-PAINTED
STEEL ANGLE

WATER SEAL
FOOD GRADE SEALANT
REQUIRED TO WASH
DOWN AREAS

FIXING
PC SS 4mm RIVETS
AT 300 CTRS

OPTIONAL WATER SEAL
FOOD GRADE SEALANT
REQUIRED TO WASH
DOWN AREAS

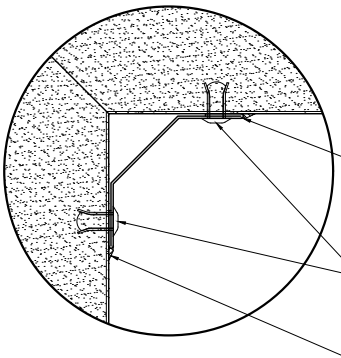

FLASHING
35 x 35 x 0.6
PRE-PAINTED STEEL
COVE ANGLE

FIXING
PC SS 4mm RIVETS
AT 300 CTRS

OPTIONAL WATER SEAL
FOOD GRADE SEALANT
REQUIRED TO WASH
DOWN AREAS

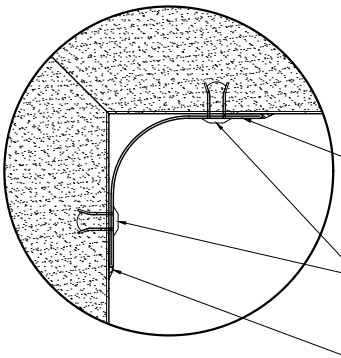

FLASHING
40 x 40 x 0.6
PRE-PAINTED
STEEL RADIUS

FIXING
PC SS 4mm RIVETS
AT 300 CTRS

OPTIONAL WATER SEAL
FOOD GRADE SEALANT
REQUIRED TO WASH
DOWN AREAS

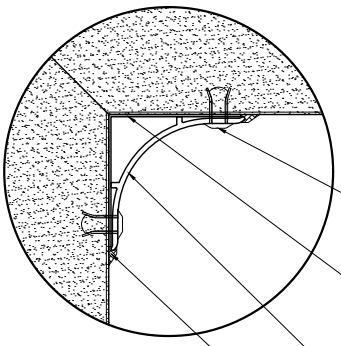

FIXING
PC SS 4mm RIVETS
AT 300 CTRS

FLASHING
35 x 35 x 0.6
PRE-PAINTED
STEEL ANGLE

EXTRUSION
35mm POWDER COATED
ALUMINIUM RADIUS

OPTIONAL WATER SEAL
FOOD GRADE SEALANT
REQUIRED TO WASH
DOWN AREAS

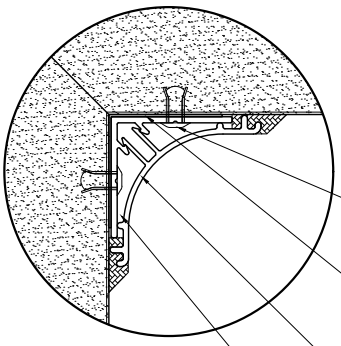

FIXING
PC SS 4mm RIVETS
AT 300 CTRS

FLASHING
30 x 30 x 0.6
PRE-PAINTED
STEEL ANGLE

EXTRUSION
POWDERCOATED
ALUMINIUM 2 PART
HIDDEN FIX RADIUS

OPTIONAL WATER SEAL
FOOD GRADE SEALANT
REQUIRED TO WASH
DOWN AREAS

ALTERNATIVE INTERNAL CORNICES - PLAN VIEW

SCALE 1:2

ASKIN Performance Panels

www.askin.net.au

VIC P : 03 8769 4816 WA P : 08 9249 4022
SA P : 08 8252 7188 QLD P : 07 3718 9500
NSW P : 02 8825 2598 NT P : 08 8252 7188

PROJECT:

EXTERIORS - VIVID

TRANSFORM PROFILE
HORIZONTAL WALL TO WALL
CONNECTION DETAILS

©ASKIN 2022

Revision		
-	-	-
-	-	-
-	-	-
-	-	-
-	-	-
-	-	-
-	-	-

Checked By: A SHANNON	Scale: 1:2
Drawn By: R VORWERK	Sheet size: A4
Issue date: 09.09.2022	Revision: -
Drawing No.	EXTVIVID - 410

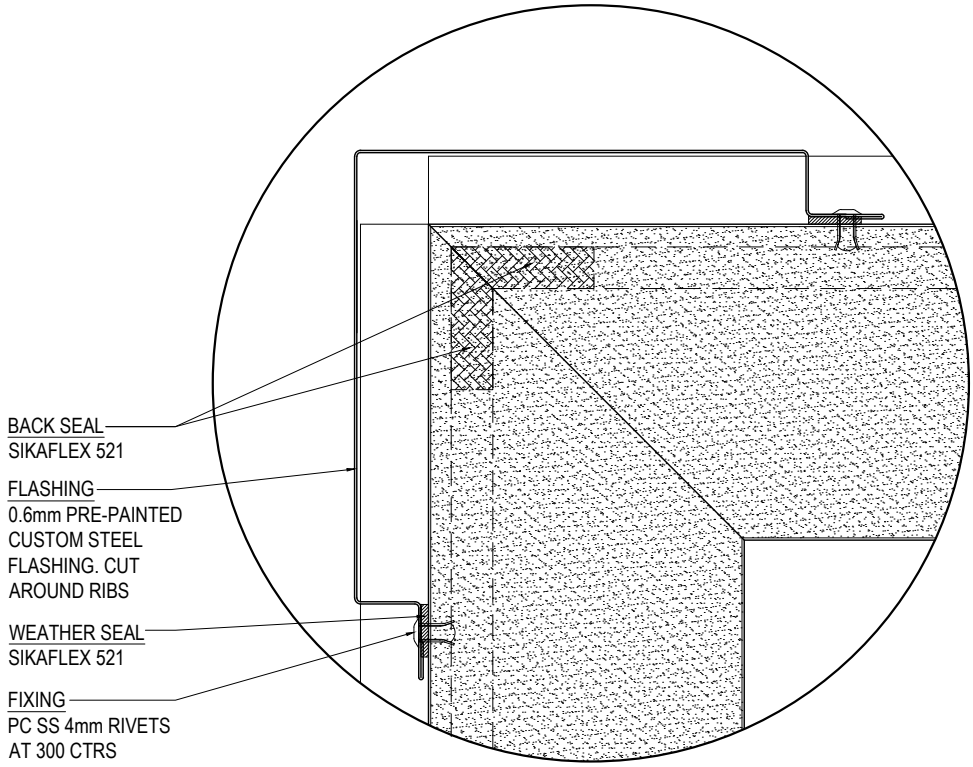

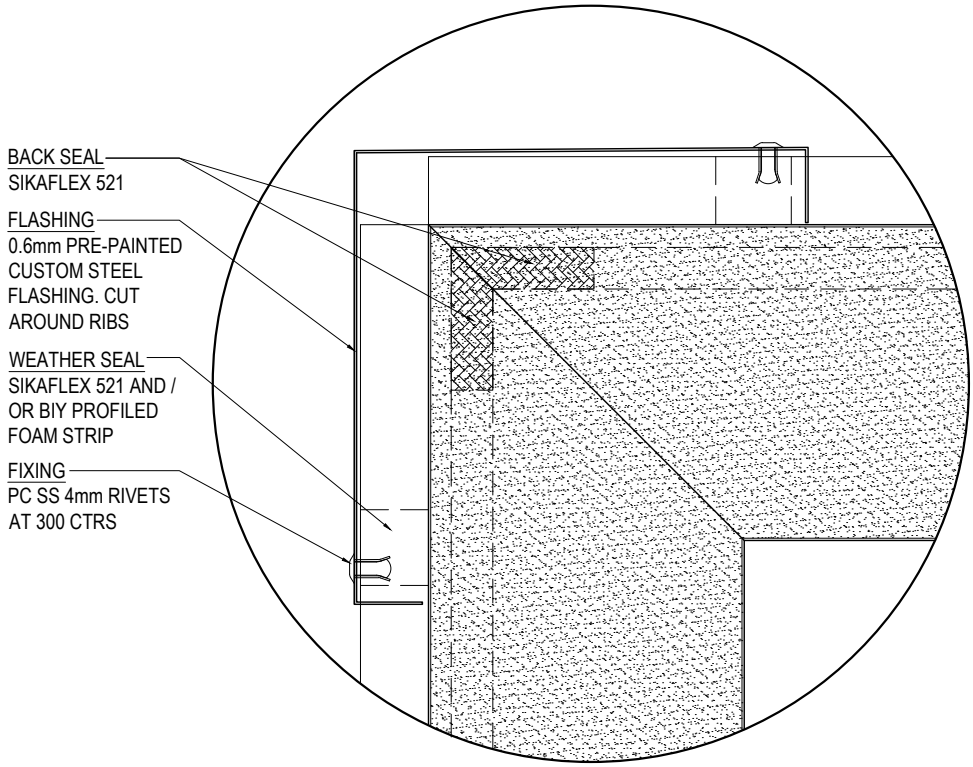

ALTERNATIVE EXTERNAL
CORNER DETAILS - PLAN VIEW
SCALE 1:2

ASKIN Performance Panels
www.askin.net.au
VIC P : 03 8769 4816 WA P : 08 9249 4022
SA P : 08 8252 7188 QLD P : 07 3718 9500
NSW P : 02 8825 2598 NT P : 08 8252 7188

PROJECT:
EXTERIORS - VIVID
TRANSFORM PROFILE
HORIZONTAL WALL TO WALL
CONNECTION DETAILS

©ASKIN 2022

Revision		
-	-	-
-	-	-
-	-	-
-	-	-
-	-	-
-	-	-
-	-	-

Checked By: A SHANNON	Scale: 1:2
Drawn By: R VORWERK	Sheet size: A4
Issue date: 09.09.2022	Revision: -
Drawing No.	EXTVIVID - 411

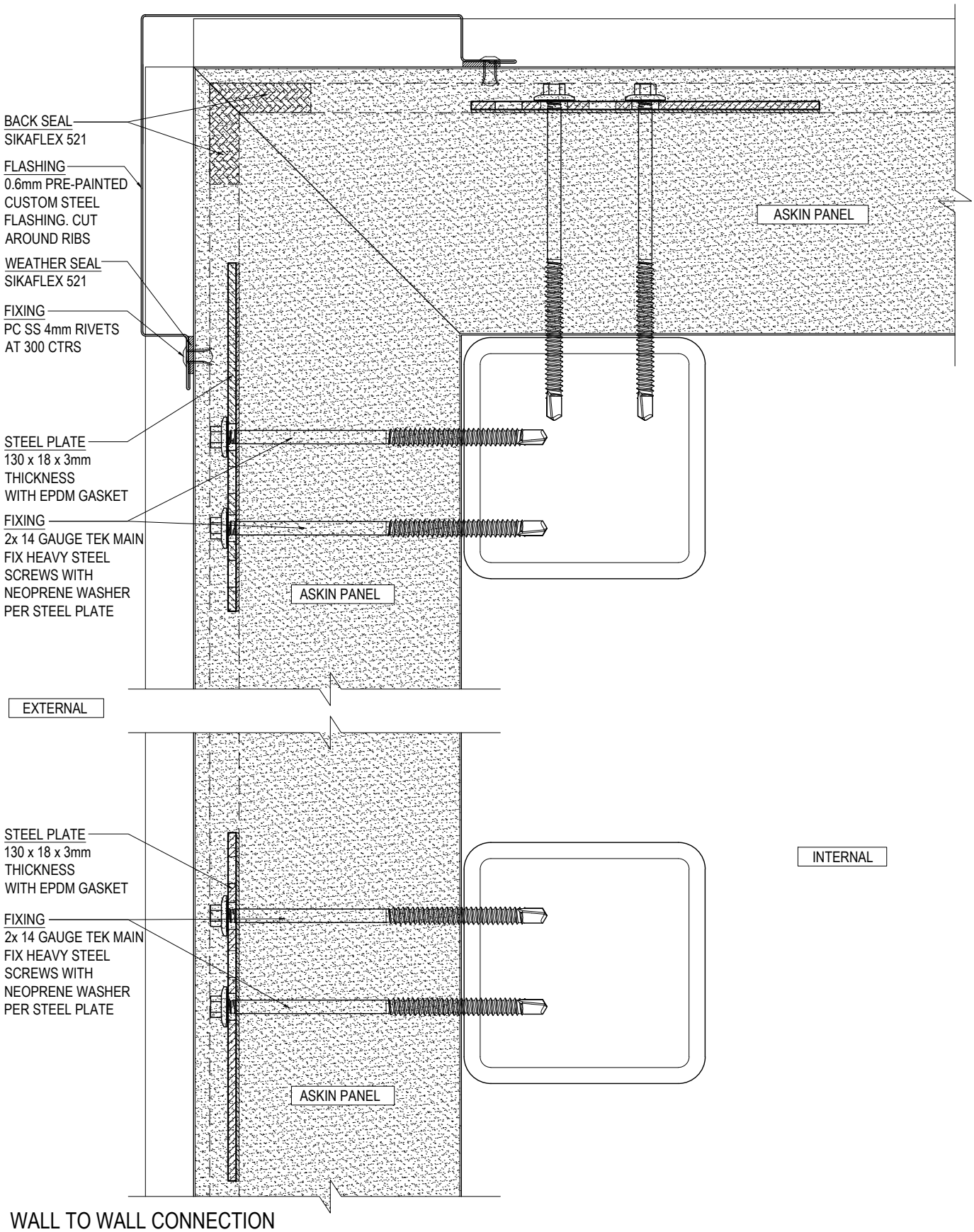

WALL TO WALL CONNECTION
DETAIL - PLAN VIEW
SCALE 1:2

ASKIN Performance Panels
www.askin.net.au
VIC P : 03 8769 4816 WA P : 08 9249 4022
SA P : 08 8252 7188 QLD P : 07 3718 9500
NSW P : 02 8825 2598 NT P : 08 8252 7188

PROJECT:

EXTERIORS - VIVID

TRANSFORM PROFILE
HORIZONTAL WALL TO WALL
CONNECTION DETAILS

©ASKIN 2022

Revision		
-	-	-
-	-	-
-	-	-
-	-	-
-	-	-
-	-	-
-	-	-

Checked By: A SHANNON	Scale: 1:2
Drawn By: R VORWERK	Sheet size: A4
Issue date: 09.09.2022	Revision: -
Drawing No.	EXTVIVID - 412

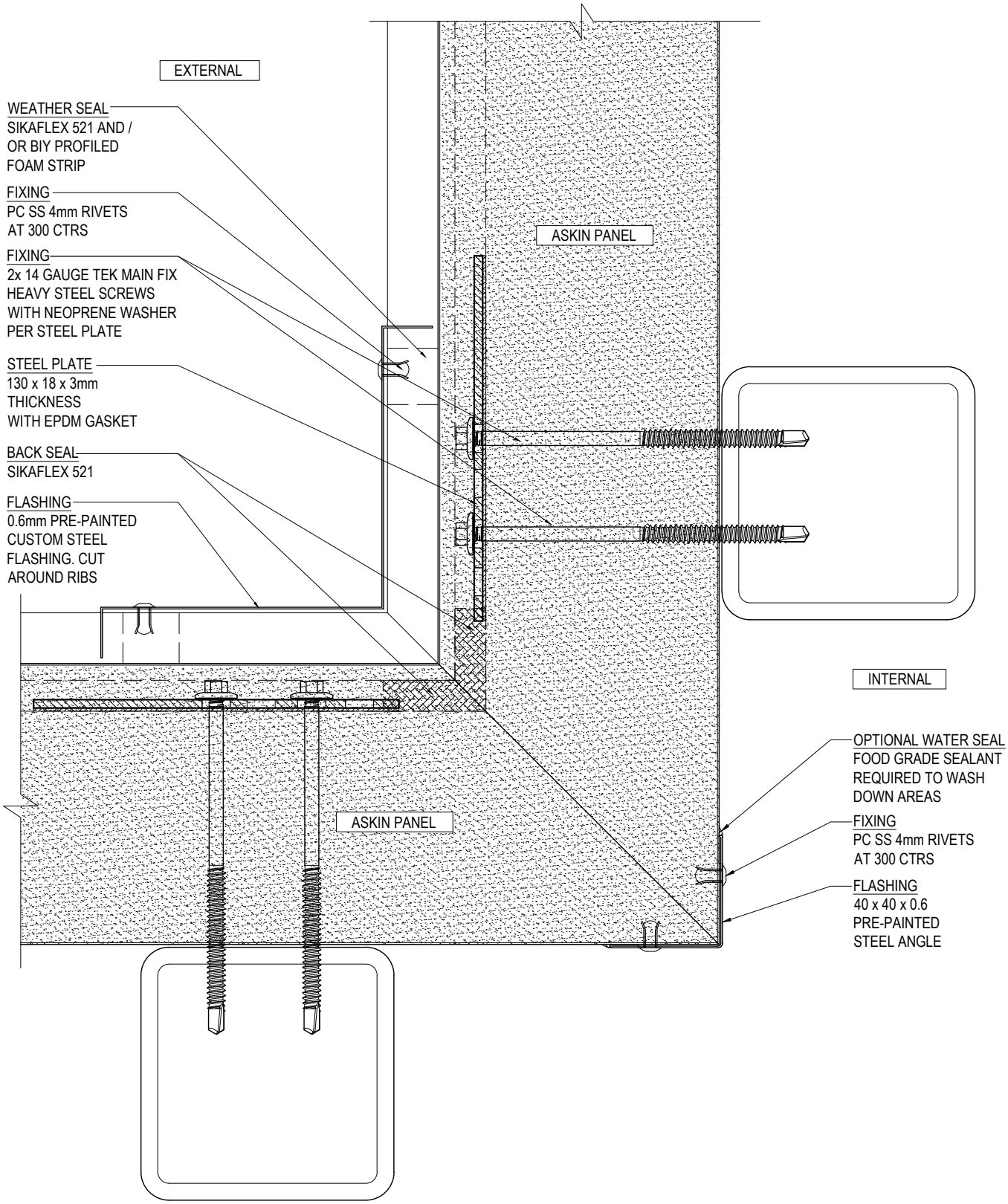

WALL TO WALL CONNECTION
DETAIL - PLAN VIEW
SCALE 1:2

ASKIN Performance Panels

www.askin.net.au

VIC	P : 03 8769 4816	WA	P : 08 9249 4022
SA	P : 08 8252 7188	QLD	P : 07 3718 9500
NSW	P : 02 8825 2598	NT	P : 08 8252 7188

PROJECT:

EXTERIORS - VIVID

TRANSFORM PROFILE
HORIZONTAL WALL TO WALL
CONNECTION DETAILS

©ASKIN 2022

Revision

-	-	-
-	-	-
-	-	-
-	-	-
-	-	-
-	-	-
-	-	-

Checked By: A SHANNON	Scale: 1:2
Drawn By: R VORWERK	Sheet size: A4
Issue date: 09.09.2022	Revision: -
Drawing No.	EXTVIVID - 413

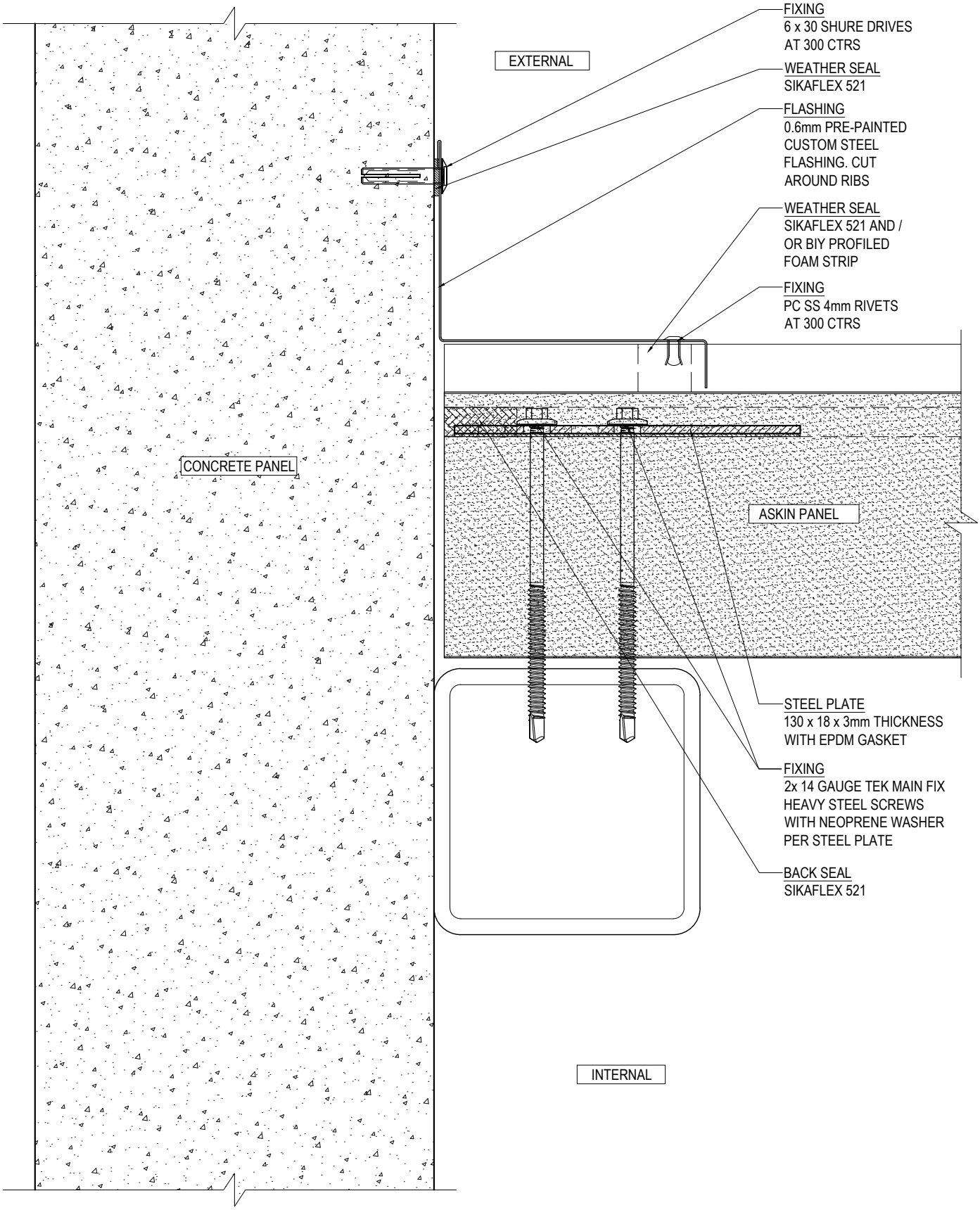

WALL TO WALL CONNECTION
DETAIL - PLAN VIEW
SCALE 1:2

ASKIN Performance Panels
www.askin.net.au
VIC P : 03 8769 4816 WA P : 08 9249 4022
SA P : 08 8252 7188 QLD P : 07 3718 9500
NSW P : 02 8825 2598 NT P : 08 8252 7188

PROJECT:
EXTERIORS - VIVID
TRANSFORM PROFILE
HORIZONTAL WALL TO WALL
CONNECTION DETAILS

©ASKIN 2022

Revision		
-	-	-
-	-	-
-	-	-
-	-	-
-	-	-
-	-	-
-	-	-

Checked By: A SHANNON	Scale: 1:2
Drawn By: R VORWERK	Sheet size: A4
Issue date: 09.09.2022	Revision: -
Drawing No.	EXTVIVID - 414

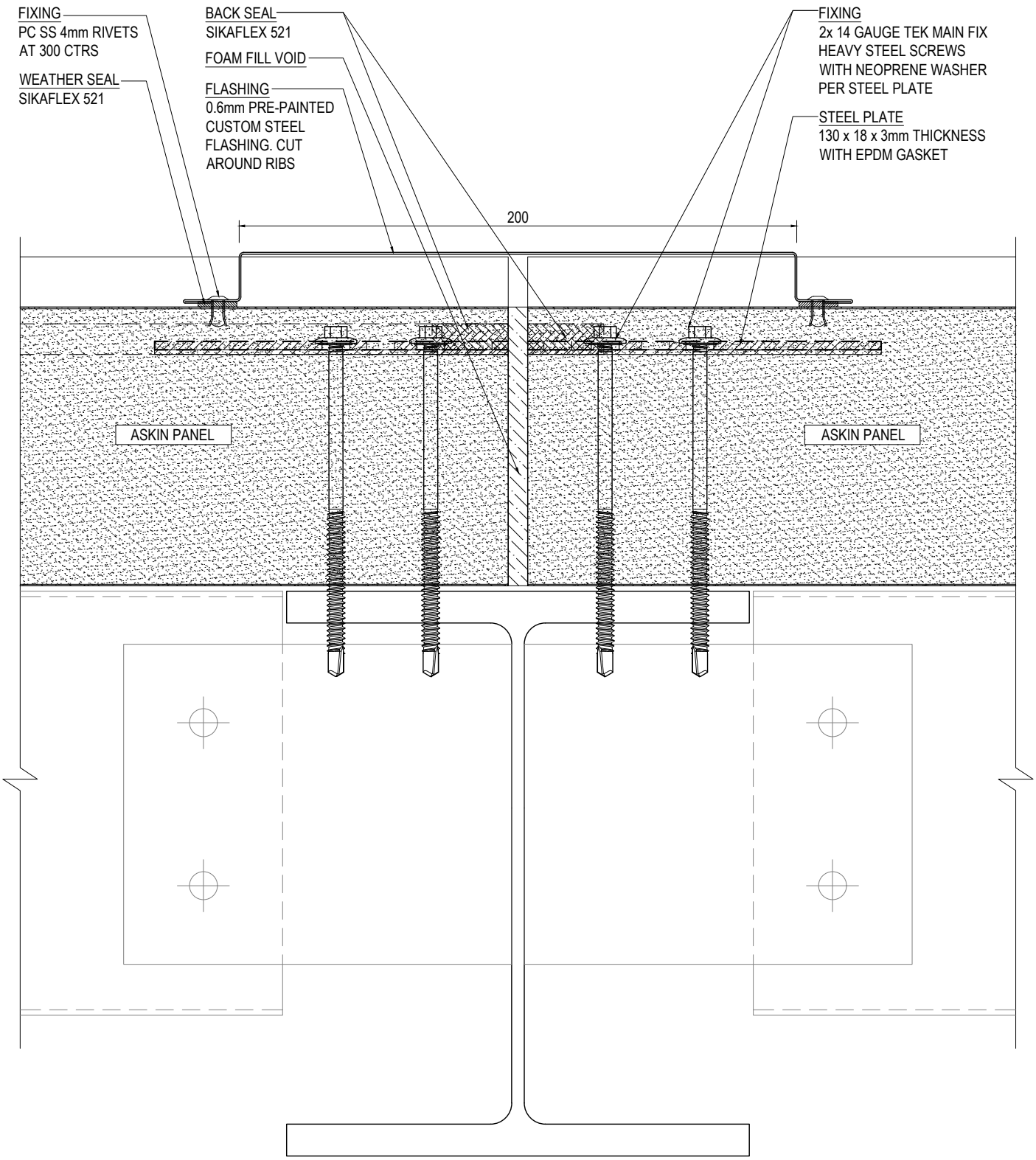

WALL TO WALL CONNECTION
DETAIL - PLAN VIEW
SCALE 1:2

ASKIN Performance Panels
www.askin.net.au
VIC P : 03 8769 4816 WA P : 08 9249 4022
SA P : 08 8252 7188 QLD P : 07 3718 9500
NSW P : 02 8825 2598 NT P : 08 8252 7188

PROJECT:
EXTERIORS - VIVID
TRANSFORM PROFILE
HORIZONTAL WALL TO WALL
CONNECTION DETAILS

©ASKIN 2022

Revision		
-	-	-
-	-	-
-	-	-
-	-	-
-	-	-
-	-	-
-	-	-

Checked By: A SHANNON	Scale: 1:2
Drawn By: R VORWERK	Sheet size: A4
Issue date: 09.09.2022	Revision: -
Drawing No.	EXTVIVID - 415

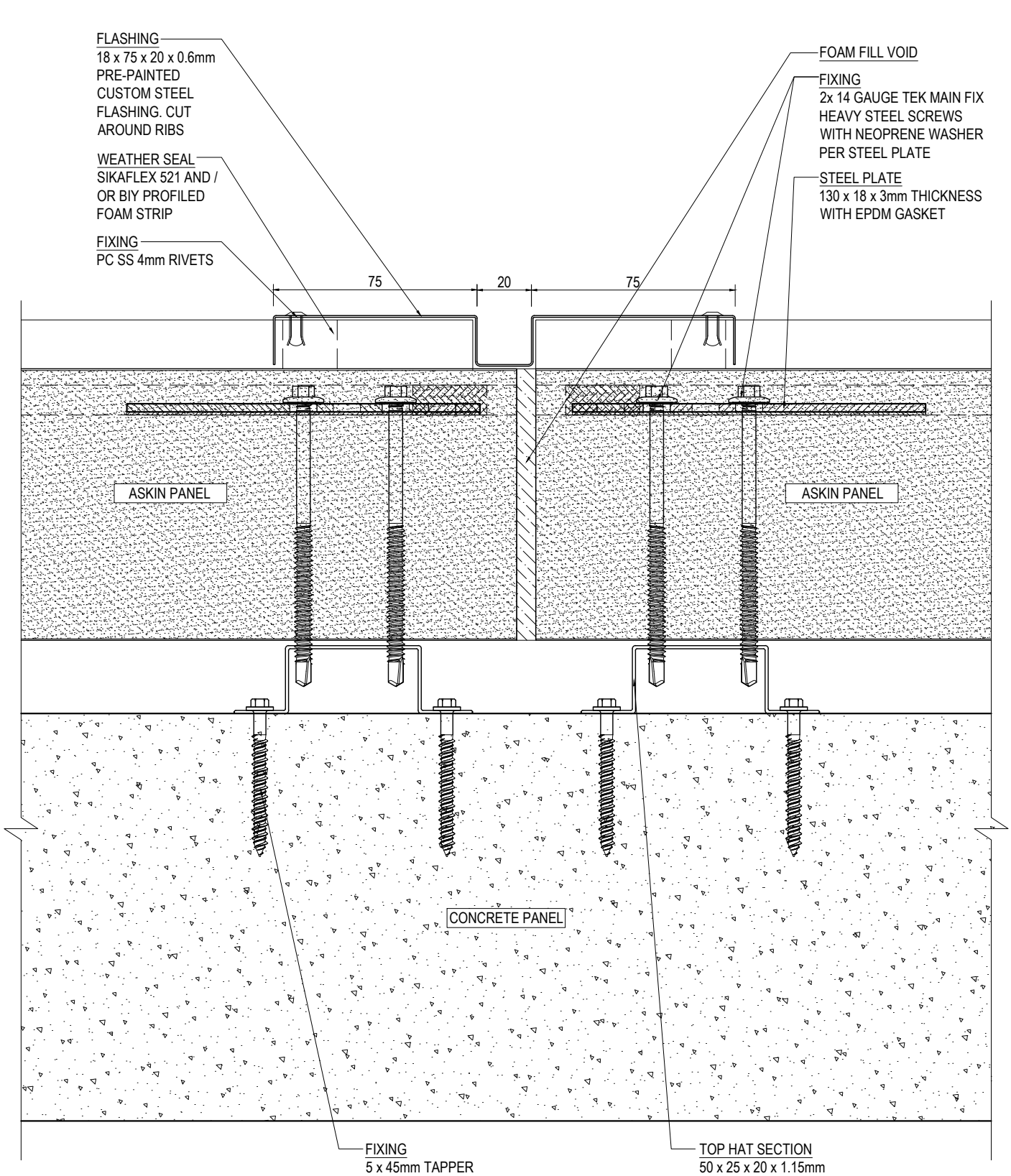

WALL TO WALL CONNECTION DETAIL - PLAN VIEW

SCALE 1:2

ASKIN Performance Panels
www.askin.net.au
VIC P : 03 8769 4816 WA P : 08 9249 4022
SA P : 08 8252 7188 QLD P : 07 3718 9500
NSW P : 02 8825 2598 NT P : 08 8252 7188

PROJECT:

EXTERIORS - VIVID

TRANSFORM PROFILE
HORIZONTAL WALL TO WALL
CONNECTION DETAILS

©ASKIN 2022

Revision		
-	-	-
-	-	-
-	-	-
-	-	-
-	-	-
-	-	-
-	-	-

Checked By: A SHANNON	Scale: 1:2
Drawn By: R VORWERK	Sheet size: A4
Issue date: 09.09.2022	Revision: -
Drawing No.	EXTVIVID - 416

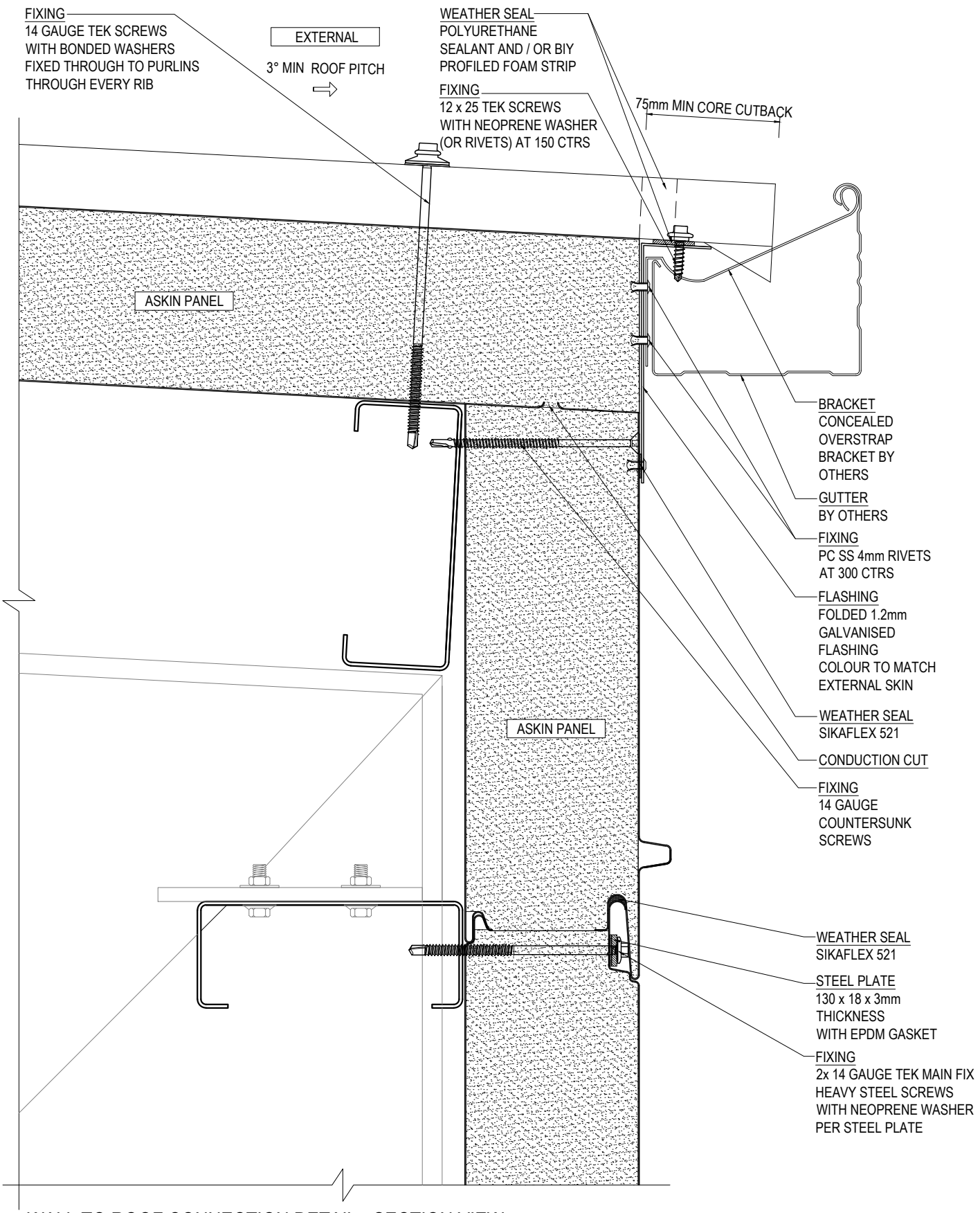

WALL TO ROOF CONNECTION DETAIL - SECTION VIEW

SCALE 1:3

ASKIN Performance Panels

www.askin.net.au

VIC	P : 03 8769 4816	WA	P : 08 9249 4022
SA	P : 08 8252 7188	QLD	P : 07 3718 9500
NSW	P : 02 8825 2598	NT	P : 08 8252 7188

PROJECT:

EXTERIORS - VIVID

TRANSFORM PROFILE
HORIZONTAL ROOFING &
PARAPET CONNECTIONS

©ASKIN 2022

Revision

-	-	-
-	-	-
-	-	-
-	-	-
-	-	-
-	-	-
-	-	-

Checked By: A SHANNON	Scale: 1:3
Drawn By: R VORWERK	Sheet size: A4
Issue date: 09.09.2022	Revision: -
Drawing No.	EXTVIVID - 420

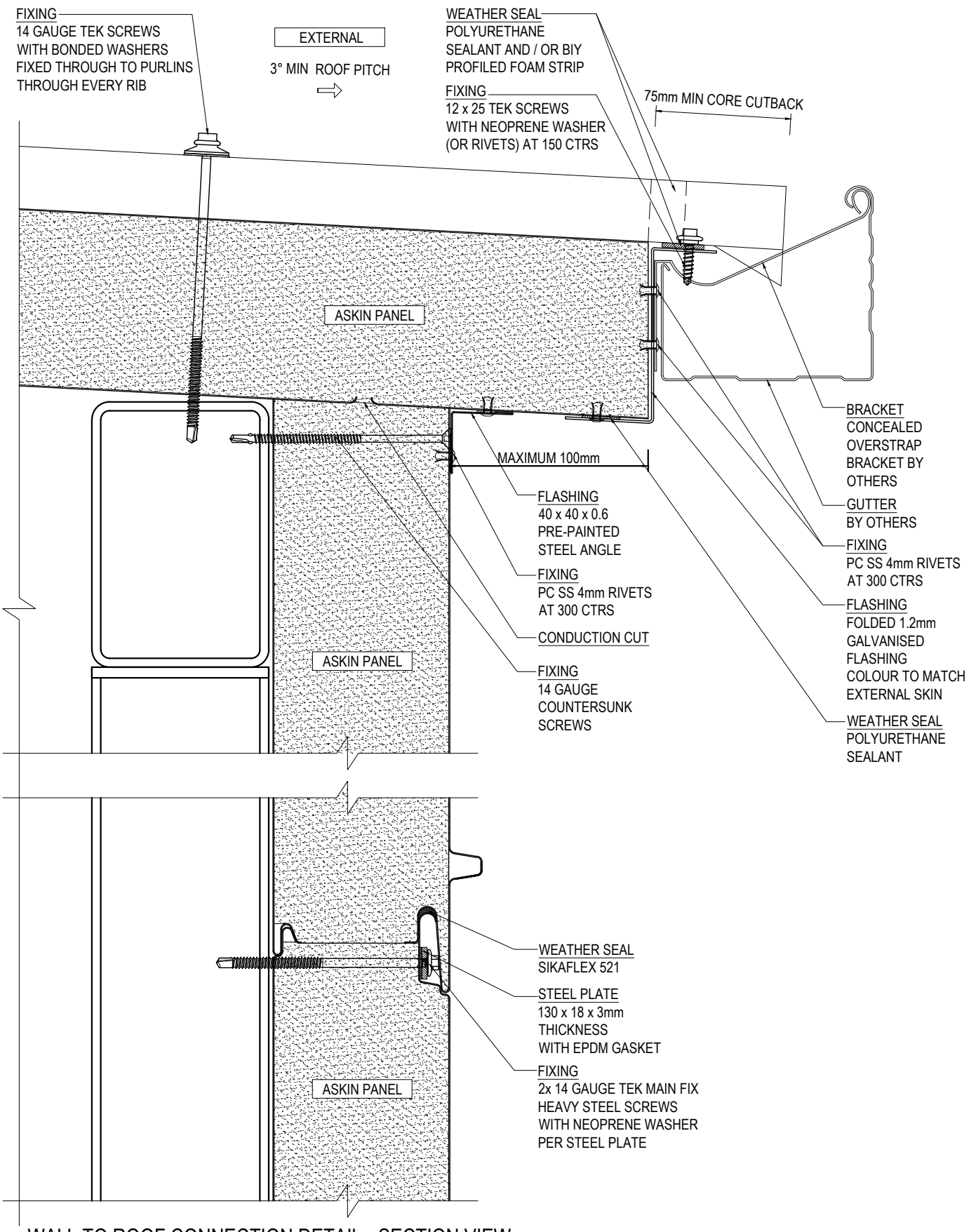

WALL TO ROOF CONNECTION DETAIL - SECTION VIEW

SCALE 1:3

ASKIN Performance Panels

www.askin.net.au

VIC P : 03 8769 4816 WA P : 08 9249 4022
SA P : 08 8252 7188 QLD P : 07 3718 9500
NSW P : 02 8825 2598 NT P : 08 8252 7188

PROJECT:

EXTERIORS - VIVID

TRANSFORM PROFILE
HORIZONTAL ROOFING &
PARAPET CONNECTIONS

©ASKIN 2022

Revision		
-	-	-
-	-	-
-	-	-
-	-	-
-	-	-
-	-	-
-	-	-

Checked By: A SHANNON	Scale: 1:3
Drawn By: R VORWERK	Sheet size: A4
Issue date: 09.09.2022	Revision: -
Drawing No.	EXTVIVID - 421

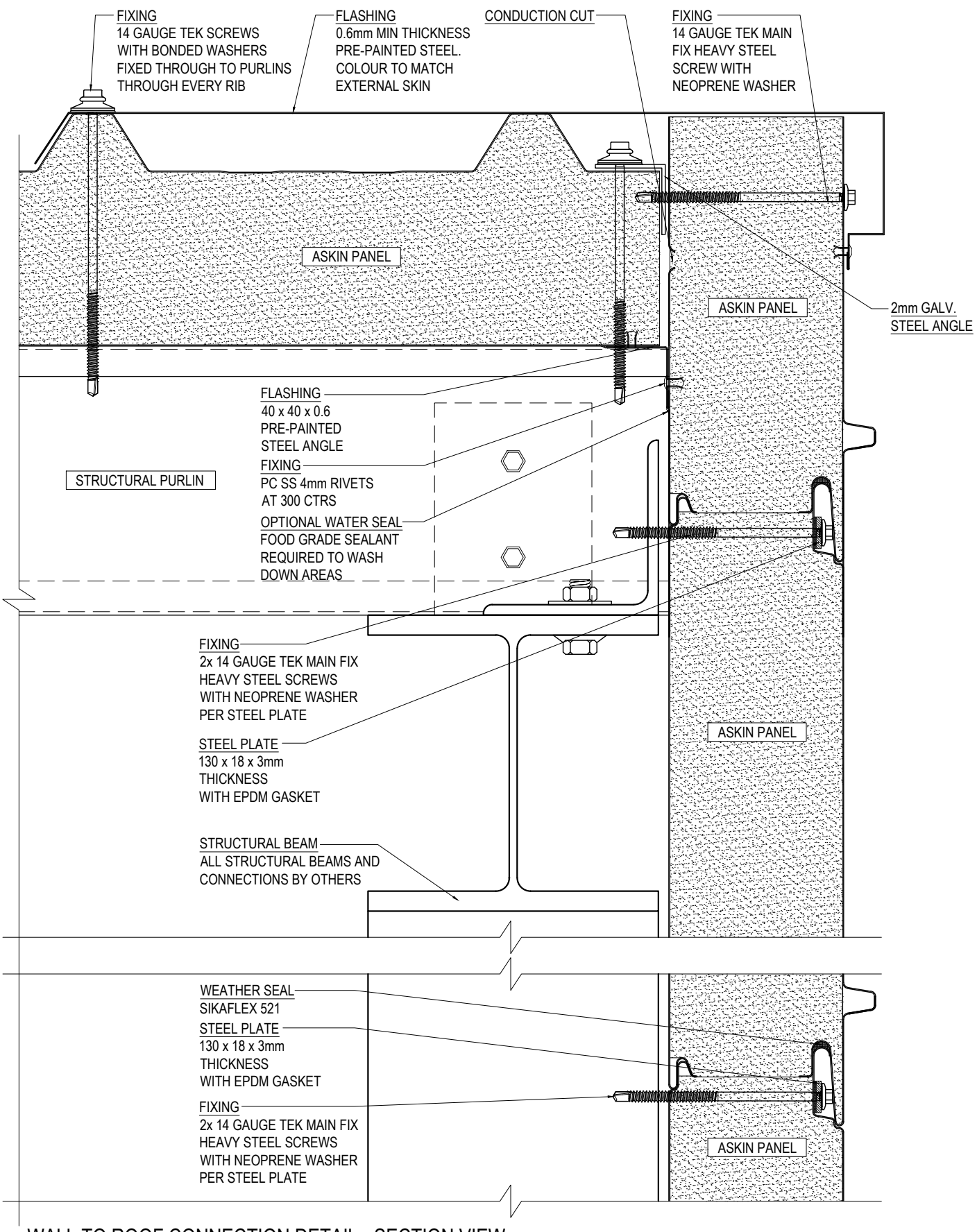

WALL TO ROOF CONNECTION DETAIL - SECTION VIEW

SCALE 1:3

ASKIN Performance Panels
www.askin.net.au
VIC P : 03 8769 4816 WA P : 08 9249 4022
SA P : 08 8252 7188 QLD P : 07 3718 9500
NSW P : 02 8825 2598 NT P : 08 8252 7188

PROJECT:

EXTERIORS - VIVID

TRANSFORM PROFILE
HORIZONTAL ROOFING &
PARAPET CONNECTIONS

©ASKIN 2022

Revision		
-	-	-
-	-	-
-	-	-
-	-	-
-	-	-
-	-	-
-	-	-

Checked By: A SHANNON	Scale: 1:3
Drawn By: R VORWERK	Sheet size: A4
Issue date: 09.09.2022	Revision: -
Drawing No.	EXTVIVID - 422

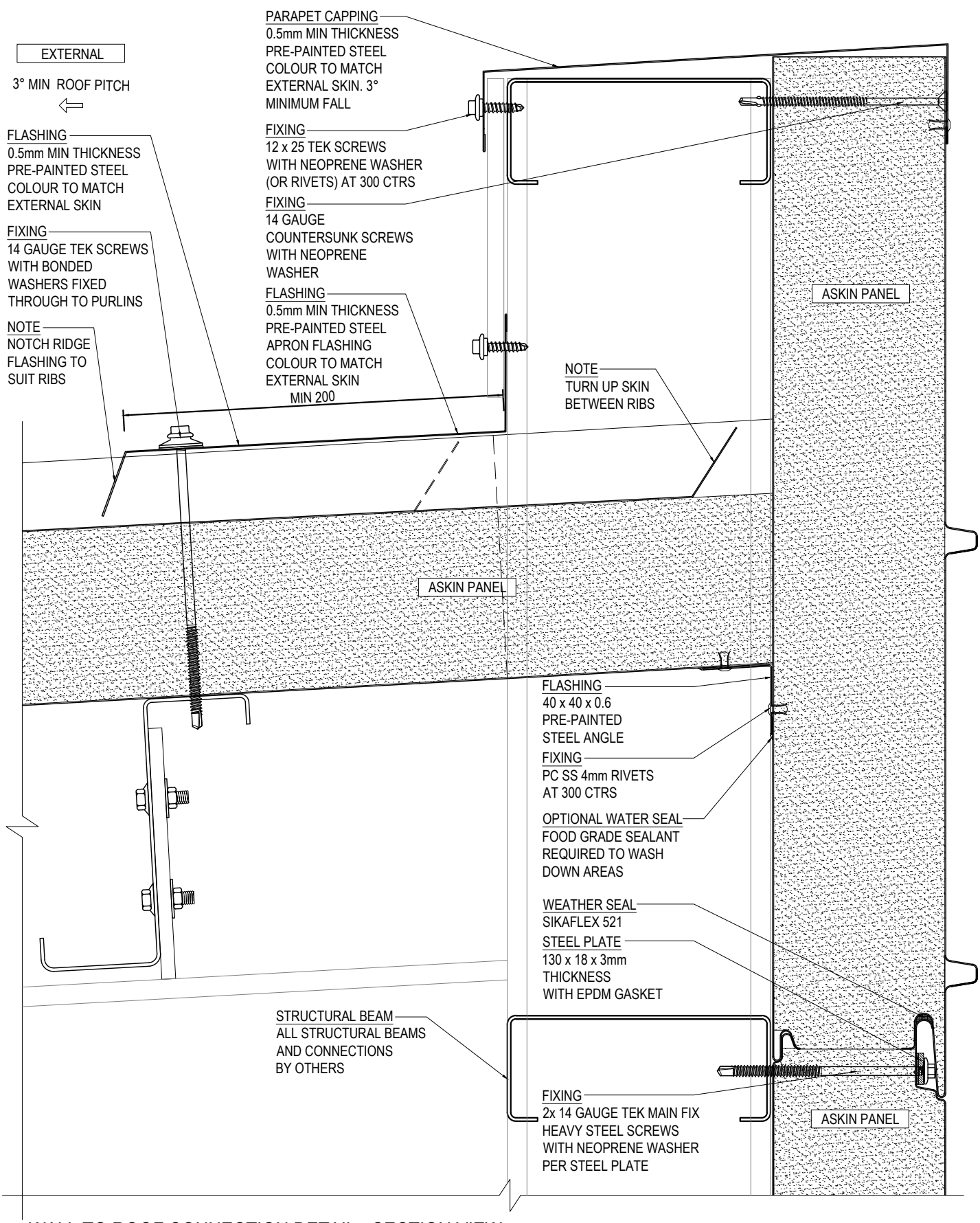

WALL TO ROOF CONNECTION DETAIL - SECTION VIEW

SCALE 1:3

ASKIN Performance Panels

www.askin.net.au

VIC	P : 03 8769 4816	WA	P : 08 9249 4022
SA	P : 08 8252 7188	QLD	P : 07 3718 9500
NSW	P : 02 8825 2598	NT	P : 08 8252 7188

PROJECT:

EXTERIORS - VIVID

TRANSFORM PROFILE
HORIZONTAL ROOFING &
PARAPET CONNECTIONS

©ASKIN 2022

Revision		
-	-	-
-	-	-
-	-	-
-	-	-
-	-	-
-	-	-
-	-	-

Checked By: A SHANNON	Scale: 1:3
Drawn By: R VORWERK	Sheet size: A4
Issue date: 09.09.2022	Revision: -
Drawing No.	EXTVIVID - 423

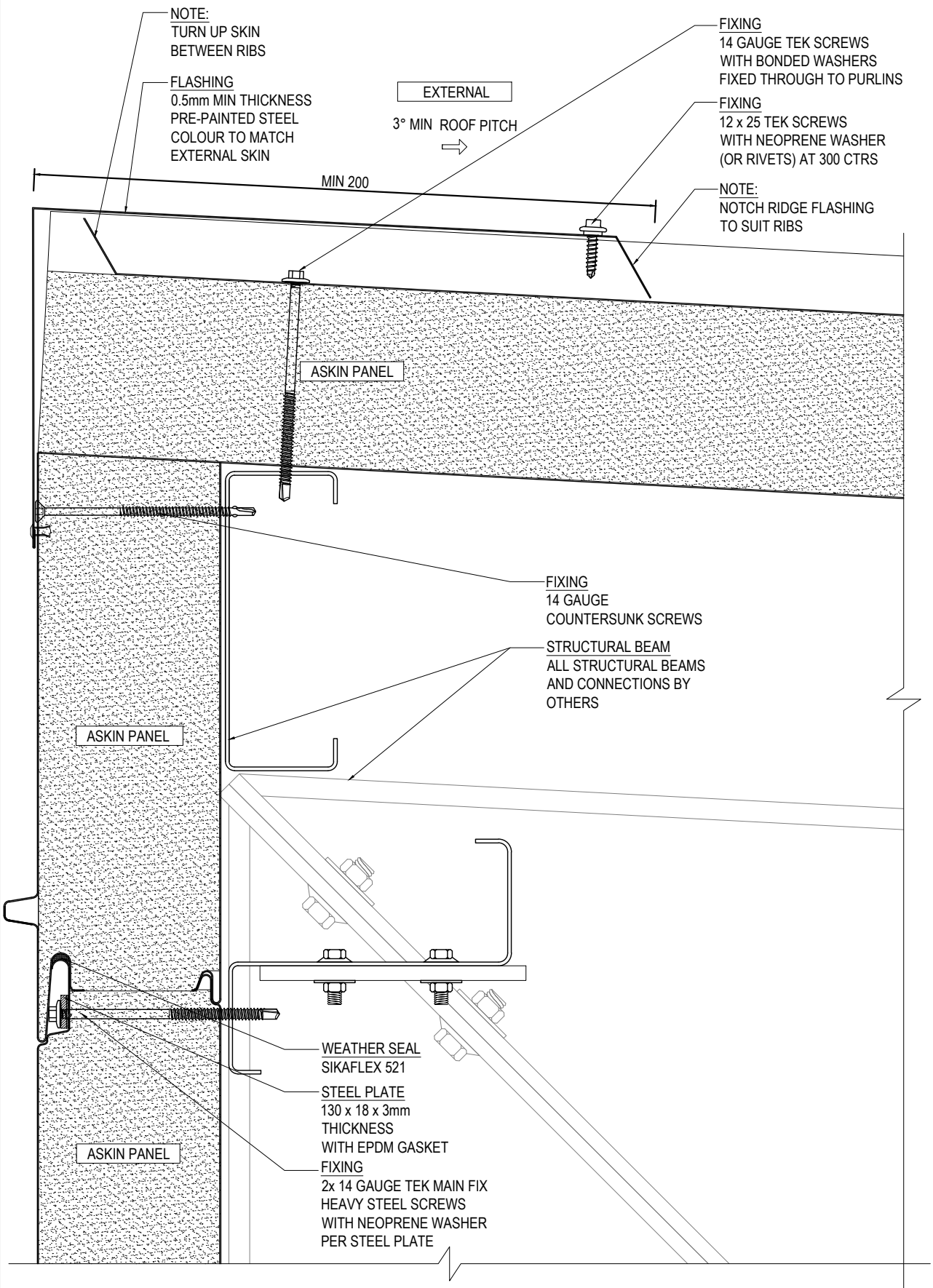

WALL TO ROOF CONNECTION DETAIL - SECTION VIEW

SCALE 1:3

ASKIN Performance Panels
www.askin.net.au
VIC P : 03 8769 4816 WA P : 08 9249 4022
SA P : 08 8252 7188 QLD P : 07 3718 9500
NSW P : 02 8825 2598 NT P : 08 8252 7188

PROJECT:

EXTERIORS - VIVID

TRANSFORM PROFILE
HORIZONTAL ROOFING &
PARAPET CONNECTIONS

©ASKIN 2022

Revision		
-	-	-
-	-	-
-	-	-
-	-	-
-	-	-
-	-	-
-	-	-

Checked By: A SHANNON	Scale: 1:3
Drawn By: R VORWERK	Sheet size: A4
Issue date: 09.09.2022	Revision: -
Drawing No.	EXTVIVID - 424

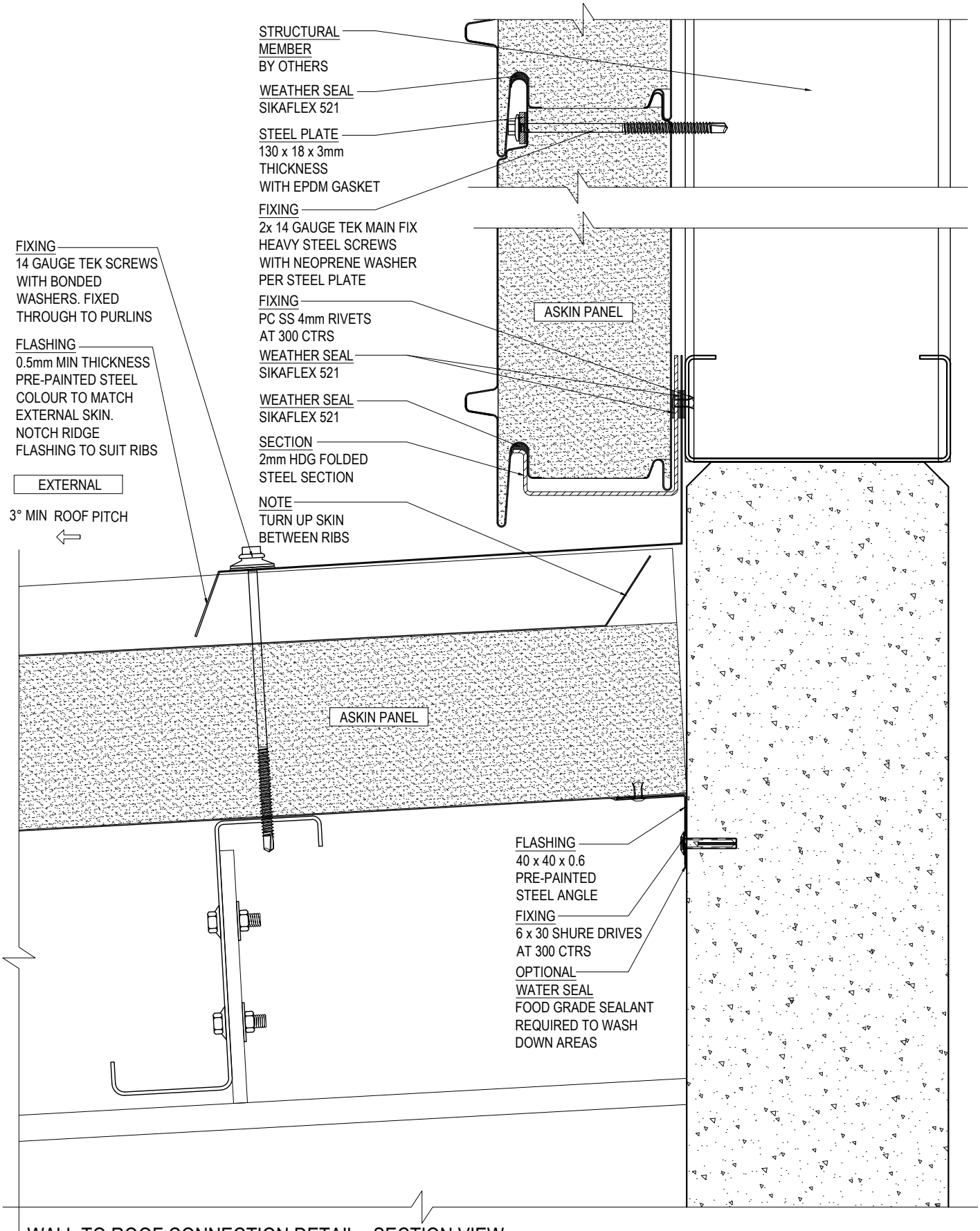

WALL TO ROOF CONNECTION DETAIL - SECTION VIEW

SCALE 1:3

ASKIN Performance Panels

www.askin.net.au

VIC P : 03 8769 4816 WA P : 08 9249 4022
SA P : 08 8252 7188 QLD P : 07 3718 9500
NSW P : 02 8825 2598 NT P : 08 8252 7188

PROJECT:

EXTERIORS - VIVID

TRANSFORM PROFILE HORIZONTAL ROOFING & PARAPET CONNECTIONS

©ASKIN 2022

Revision

-	-	-
-	-	-
-	-	-
-	-	-
-	-	-
-	-	-
-	-	-

Checked By: A SHANNON	Scale: 1:3
Drawn By: R VORWERK	Sheet size: A4
Issue date: 09.09.2022	Revision: -
Drawing No.	EXTVIVID - 425

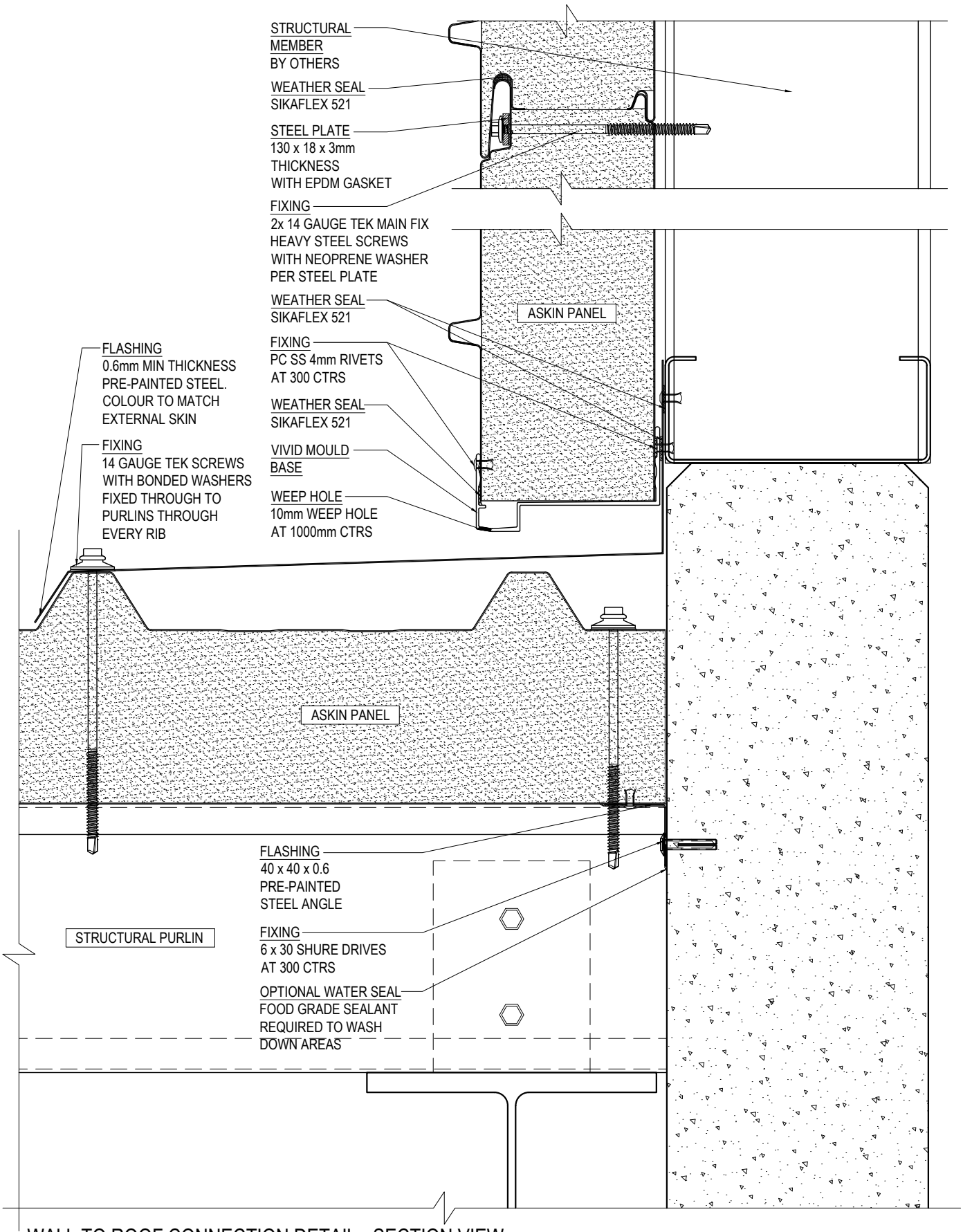

WALL TO ROOF CONNECTION DETAIL - SECTION VIEW

SCALE 1:3

ASKIN Performance Panels
www.askin.net.au
VIC P : 03 8769 4816 WA P : 08 9249 4022
SA P : 08 8252 7188 QLD P : 07 3718 9500
NSW P : 02 8825 2598 NT P : 08 8252 7188

PROJECT:

EXTERIORS - VIVID

TRANSFORM PROFILE HORIZONTAL ROOFING & PARAPET CONNECTIONS

©ASKIN 2022

Revision

-	-	-
-	-	-
-	-	-
-	-	-
-	-	-
-	-	-
-	-	-

Checked By: A SHANNON	Scale: 1:3
Drawn By: R VORWERK	Sheet size: A4
Issue date: 09.09.2022	Revision: -
Drawing No.	EXTVIVID - 426

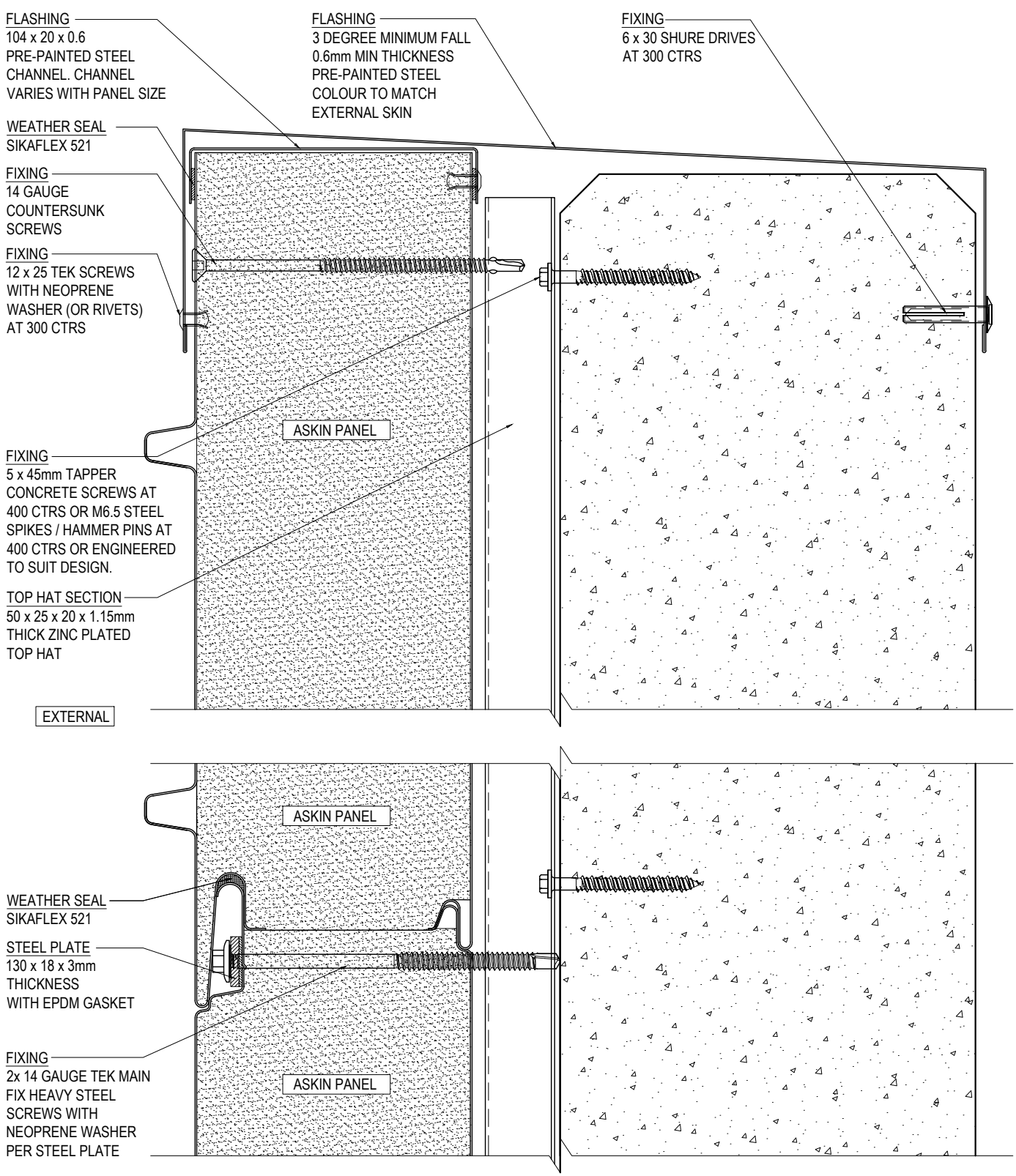

WALL TO ROOF CONNECTION DETAIL - SECTION VIEW

SCALE 1:2

ASKIN Performance Panels

www.askin.net.au

VIC	P : 03 8769 4816	WA	P : 08 9249 4022
SA	P : 08 8252 7188	QLD	P : 07 3718 9500
NSW	P : 02 8825 2598	NT	P : 08 8252 7188

PROJECT:

EXTERIORS - VIVID

TRANSFORM PROFILE
HORIZONTAL ROOFING &
PARAPET CONNECTIONS

©ASKIN 2022

Revision

-	-	-
-	-	-
-	-	-
-	-	-
-	-	-
-	-	-
-	-	-

Checked By: A SHANNON	Scale: 1:2
Drawn By: R VORWERK	Sheet size: A4
Issue date: 09.09.2022	Revision: -
Drawing No.	EXTVIVID - 427

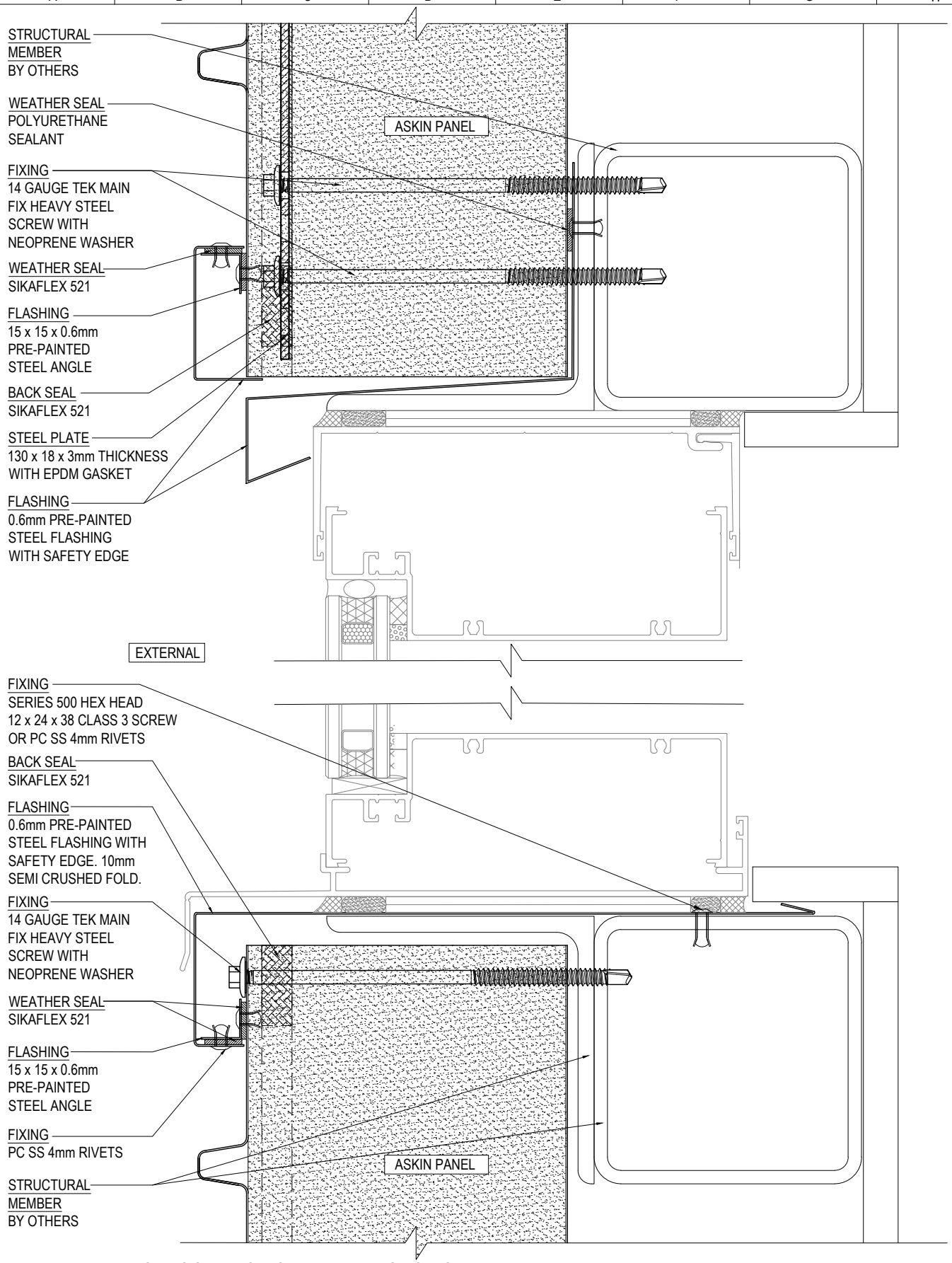

WINDOW CONNECTION DETAIL - SECTION VIEW

SCALE 1:2

ASKIN Performance Panels

www.askin.net.au

VIC P : 03 8769 4816 WA P : 08 9249 4022
SA P : 08 8252 7188 QLD P : 07 3718 9500
NSW P : 02 8825 2598 NT P : 08 8252 7188

PROJECT:

EXTERIORS - VIVID

TRANSFORM PROFILE
HORIZONTAL WINDOW
CONNECTION DETAILS

©ASKIN 2022

Revision		
-	-	-
-	-	-
-	-	-
-	-	-
-	-	-
-	-	-
-	-	-

Checked By: A SHANNON	Scale: 1:2
Drawn By: R VORWERK	Sheet size: A4
Issue date: 09.09.2022	Revision: -
Drawing No.	EXTVIVID - 430

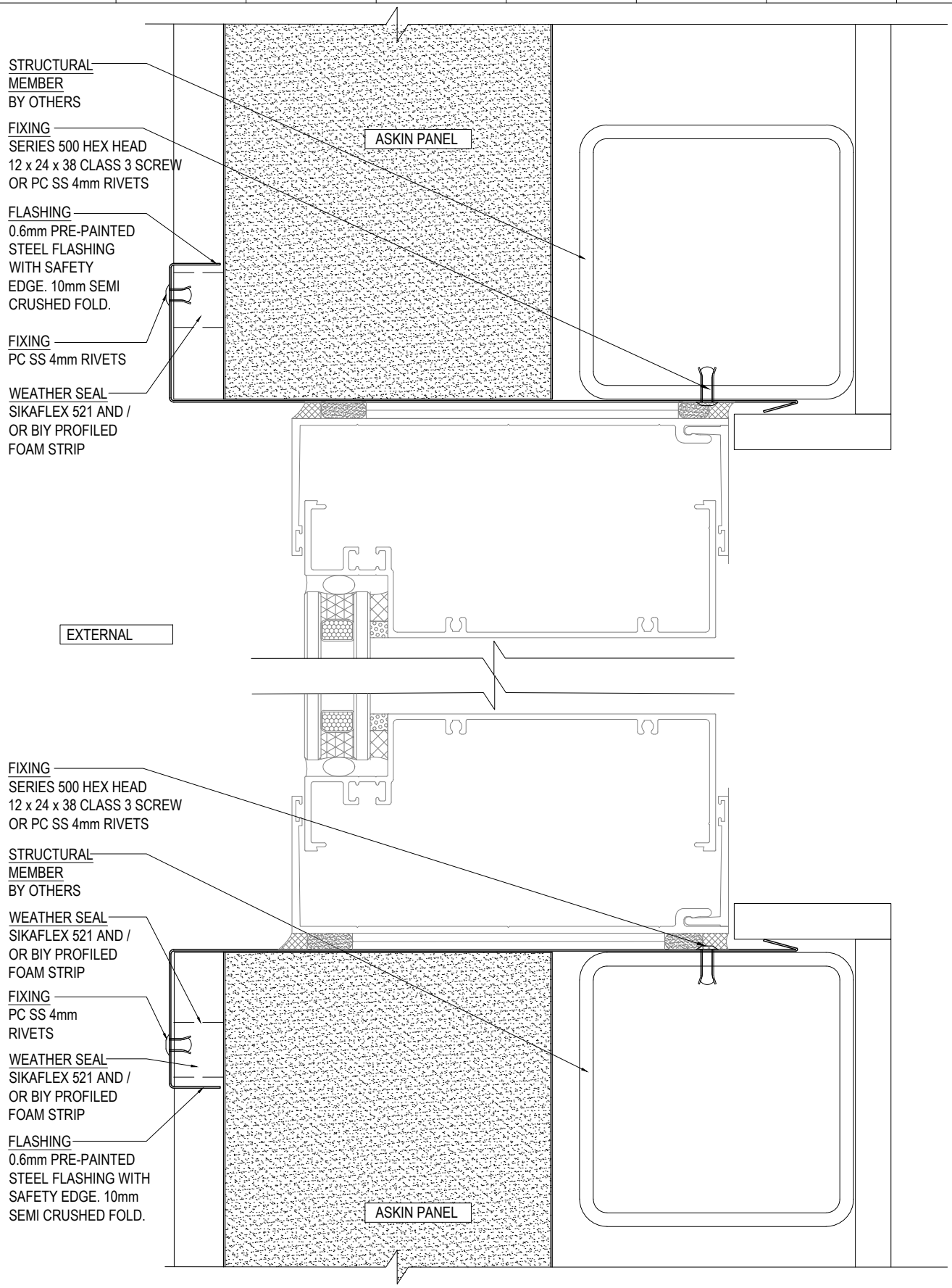

WINDOW CONNECTION DETAIL - PLAN VIEW

SCALE 1:2

ASKIN Performance Panels

www.askin.net.au

VIC	P : 03 8769 4816	WA	P : 08 9249 4022
SA	P : 08 8252 7188	QLD	P : 07 3718 9500
NSW	P : 02 8825 2598	NT	P : 08 8252 7188

PROJECT:

EXTERIORS - VIVID

TRANSFORM PROFILE
HORIZONTAL WINDOW
CONNECTION DETAILS

©ASKIN 2022

Revision

-	-	-
-	-	-
-	-	-
-	-	-
-	-	-
-	-	-
-	-	-

Checked By: A SHANNON	Scale: 1:2
Drawn By: R VORWERK	Sheet size: A4
Issue date: 09.09.2022	Revision: -
Drawing No.	EXTVIVID - 431